Overview

The order number consists of a combination of figures and letters and is divided into three blocks linked with hyphens for a better overview, e.g.
1LE1001-1DB20-1AA5-Z
H00

The first block (Positions 1 to 7) identifies the motor type; the second block (Positions 8 to 12) defines the motor frame size and length, the number of poles and in some cases the frequency/output; and in the third block (Positions 13 to 16), the frequency/output, type of construction and other design features are encoded.

For deviations in the second and third block from the catalog codes, either **-Z** or **9** should be used as appropriate.

Ordering data:

- Complete Order No. and order code(s) or plain text.
- If a quotation has been requested, please specify the quotation number in addition to the Order No.
- When ordering a complete motor as a spare part, please specify the works serial No. for the previously supplied motor as well as the Order No.

Structure of the Order No.:	Position: 1 2 3 4 5 6 7 - 8 9 10 11 12 - 13 14 15 16	
IEC squirrel-cage motors, surface-cooled		
Positions 1 to 4: Digit, letter, letter, digit	**New generation** Design or version (motor type) • Standard: Self-ventilated by fan mounted on and driven by rotor • Expansion option (F90): Forced-air cooled by air flow from the fan to be driven	1 L E 1
	• Special: Self-cooled without external fan and fan cover	1 P C 1
Positions 5 to 7: 3 digits	• Motors with high efficiency (High Efficiency, EFF1), aluminum housing	0 0 1
	• Motors with improved efficiency (Improved Efficiency, EFF2), aluminum housing	0 0 2
Positions 8, 9 and 11: Digit, letter, digit	**Motor frame size** (frame size as a combination of shaft height and overall length, encoded)	8: 1; 9: A ... D; 11: 0 ... 6
Position 10: Letter	**Number of poles** A ... D = 2-, 4-, 6-, 8-pole	10: A ... D
Positions 12 and 13: 2 digits	**Voltage, circuit and frequency**	12: 0 ... 9; 13: 0 ... 8
Position 14: Letter	**Type of construction** (A – V)	14: A ... V
Position 15: Letter	**Motor protection** (A – Z; special versions encoded)	15: A ... Z
Position 16: Digit	**Mechanical design (motor version and connection box position)** • **General Line motors with shorter delivery times, limited options** (connection box on top, cast feet, only basic versions possible, non-drive-end (NDE) cannot be modified) • **All options are possible or can be modified** - Connection box on top - Connection box on RHS (viewed from DE) - Connection box on LHS (viewed from DE) - Connection box below	16: 0; 4 5 6 7
	Special order versions: encoded – additional order code required not encoded – additional plain text required	- Z

Ordering example

Selection criteria	Requirement	Structure of the Order No.
Motor type	New generation Standard motor with high efficiency EFF1, IP55 degree of protection, aluminum version	**1LE1001-❑❑❑❑❑-❑❑❑❑**
Motor frame size/No. of poles/speed	160/4-pole/1500 rpm	**1LE1001-1DB2❑-❑❑❑❑**
Rated output	11 kW	
Voltage and frequency	230 VΔ/400 VY, 50 Hz	**1LE1001-1DB22-2❑❑❑**
Type of construction	IM V5 with protective cover [1]	**1LE1001-1DB22-2C❑❑-Z** **H00**
(Special versions)	3 PTC thermistors (motor protection with 3 embedded temperature sensors for tripping [2])	**1LE1001-1DB22-2CB❑-Z** **H00**
Mechanical design (motor version)	Connection box on RHS (viewed from DE)	**1LE1001-1DB22-2CB5-Z** **H00**
	Mounted separately driven fan	**1LE1001-1DB22-2CB5-Z** **H00 F70**

[1] Standard without protective cover – the protective cover is defined with option **H00** and this option must be ordered in addition.

[2] No additional option must be specified in the order.

Overview

The order codes and availability are assigned to the individual motor series in the "Selection and ordering data" in catalog part 1.

For

- Voltages
- Types of constructions
- Motor protection
- Motor connection and connection box

see the relevant heading in section "General technical data" in this catalog part.

Attention:
For 1LE1 and 1PC1 motors apply only the "Special versions" of the following table and of catalog part 1. Motor protection and motor connection or connection box can be defined as Order No. supplement with the positions 15 or 16 of the Order No.

All available options are listed according to topics in the following table. An alphanumerical listing according to order codes can be found in the appendix under "Overview of order codes".

Order code		Special versions	For further information, see Page
Motor connection and connection box			
R15		One cable gland, metal	0/114
R10		Rotation of the connection box through 90°, entry from DE	0/114
R11		Rotation of the connection box through 90°, entry from NDE	0/114
R12		Rotation of the connection box through 180°	0/114
R50	New!	Larger connection box	0/113
R30	New!	Reduction piece for M cable gland in accordance with British standard, both cable entries mounted	0/114
H04		External earthing	0/113
R20	New!	3 cables protruding, 0.5 m long	0/114
R21	New!	3 cables protruding, 1.5 m long	0/114
R22	New!	6 cables protruding, 0.5 m long	0/114
R23	New!	6 cables protruding, 1.5 m long	0/114
R24	New!	6 cables protruding, 3 m long	0/114
H08	New!	Connection box on NDE	0/113
Windings and insulation			
N01		Temperature class 155 (F), used acc. to 155 (F), with service factor (SF)	0/108
N02		Temperature class 155 (F), used acc. to 155 (F), with increased output	0/108
N03		Temperature class 155 (F), used acc. to 155 (F), with increased coolant temperature	0/108
N11	New!	Temperature class 180 (H) at rated power and max. CT 60 °C	0/108
N20	New!	Increased air humidity/temperature with 30 to 60 g water per m^3 of air	0/108
N05		Temperature class 155 (F), used acc. to 130 (B), coolant temperature 45 °C, derating approx. 4 %	0/108
N06		Temperature class 155 (F), used acc. to 130 (B), coolant temperature 50 °C, derating approx. 8 %	0/108
N07		Temperature class 155 (F), used acc. to 130 (B), coolant temperature 55 °C, derating approx. 13 %	0/108
N08		Temperature class 155 (F), used acc. to 130 (B), coolant temperature 60 °C, derating approx. 18 %	0/108
N21	New!	Increased air humidity/temperature with 60 to 100 g water per m^3 of air	0/108
Y52		Temperature class 155 (F), used acc. to 155 (F), other requirements	0/108
Colors and paint finish			
Y54		Special finish in other standard RAL colors	0/101
Y51		Special finish in special RAL colors	0/101
S03	New!	Special finish sea air resistant	0/100
S00		Unpainted (only cast iron parts primed)	0/100
S01		Unpainted, only primed	0/100
Modular technology – Basic versions			
F70		Mounting of separately driven fan	0/129
F01		Mounting of brake	0/130 ...
G01		Mounting of 1XP8012-10 (HTL) rotary pulse encoder	0/128
G02		Mounting of 1XP8012-20 (TTL) rotary pulse encoder	0/128
Modular technology – Additional versions			
F10		Brake supply voltage 24 V DC	0/133
F11		Brake supply voltage 230 V AC, 50/60 Hz	0/133
F12		Brake supply voltage 400 V AC, 50/60 Hz	0/133
F50		Mechanical manual brake release with lever (no locking)	0/133
Special technology			
G04		Mounting of LL 861 900 220 rotary pulse encoder	0/134
G05		Mounting of HOG 9 D 1024 I rotary pulse encoder	0/135
G06		Mounting of HOG 10 D 1024 I rotary pulse encoder	0/136

Overview "Special versions" (Fortsetzung)

Order code		Special versions	For further information, see Page
Mechanical design and degrees of protection			
H00		Protective cover for types of construction	0/119
H01		Screwed-on feet (instead of cast)	0/113
H23	New!	Radial seal on DE for flange-mounting motors with oil resistance to 0.1 bar	0/118
F77	New!	Low-noise version for 2-pole motors with clockwise direction of rotation	0/119
F78	New!	Low-noise version for 2-pole motors with counter-clockwise direction of rotation	0/119
H20	New!	IP65 degree of protection	0/119
H22	New!	IP56 degree of protection (non-heavy-sea)	0/119
H02	New!	Vibration-proof version	0/119
H03		Condensation drainage holes	0/119
H07	New!	Non-rusting screws (externally)	0/119
G40		Prepared for mountings, only center hole	0/118
G41		Prepared for mountings with D12 shaft	0/118
G42		Prepared for mountings with D16 shaft	0/118
G43	New!	Protective cover for encoder (loosely enclosed – only for mountings acc. to order codes G40, G41 and G42)	0/118
Coolant temperature and site altitude			
D03	New!	Coolant temperature –40 °C to +40 °C	0/107
D04	New!	Coolant temperature –30 °C to +40 °C	0/107
Designs in accordance with standards and specifications			
D30	New!	Electrical according to NEMA MG1-12	0/99
D31	New!	Design according to UL with "Recognition Mark"	0/99
D40	New!	Canadian regulations (CSA)	0/98, 0/99
D46	New!	PSE Mark Japan	0/99
Bearings and lubrication			
Q01		Measuring nipple for SPM shock pulse measurement for bearing inspection	0/122
L22		Bearing design for increased cantilever forces	0/122, 0/124 ...
L25		Special bearing for DE and NDE, bearing size 63	0/122, 0/124 ...
L23		Regreasing device	0/122
L20		Located bearing at DE	0/122
L21		Located bearing at NDE	0/122
Balance and vibration quantity			
L00		Vibration quantity level B	0/120
L02		Full-key balancing	0/120
L01		Balancing without fitted key	0/120
Shaft and rotor			
L08		Concentricity of shaft extension, coaxiality and linear movement in accordance with DIN 42955 Tolerance R for flange-mounting motors	0/121
L05		Second standard shaft extension	0/121
L04	New!	Shaft extension with standard dimensions, without featherkey way	0/121
L07		Concentricity of shaft extension in accordance with DIN 42955 Tolerance R	0/121
L06		Standard shaft made of non-rusting steel	0/121
Y55	New!	Non-standard cylindrical shaft extension	0/121
Heating and ventilation			
F75	New!	Fan cover for textile industry	0/111
F76	New!	Metal external fan	0/111
Q02		Anti-condensation heaters for 230 V	0/111
Q03		Anti-condensation heaters for 115 V	0/111
F74		Sheet metal fan cover	0/111
Rating plate and extra rating plates			
M10		Second rating plate, loose	0/106
M11		Nirosta rating plate	0/106
Y80		Extra rating plate or rating plate with deviating rating plate data	0/106
Y82		Extra rating plate with identification codes	0/106
Y84		Additional information on rating plate and on package label (max. of 20 characters)	0/106
Packaging, safety notes, documentation and test certificates			
B00		Without safety and commissioning note. Customer's declaration of renouncement required.	0/102
B01		With one safety and start-up guide per box pallet	0/102
B02		Acceptance test certificate 3.1 in accordance with EN 10204	0/102
B04		Printed operating instructions English/German enclosed	0/102
B83	New!	Type test with heat run for horizontal motors, with acceptance	0/102
B99		Wire-lattice pallet	0/102
M01		Connected in star for dispatch	0/102
M02		Connected in delta for dispatch	0/102

Overview

Cut-away diagram of a low-voltage motor

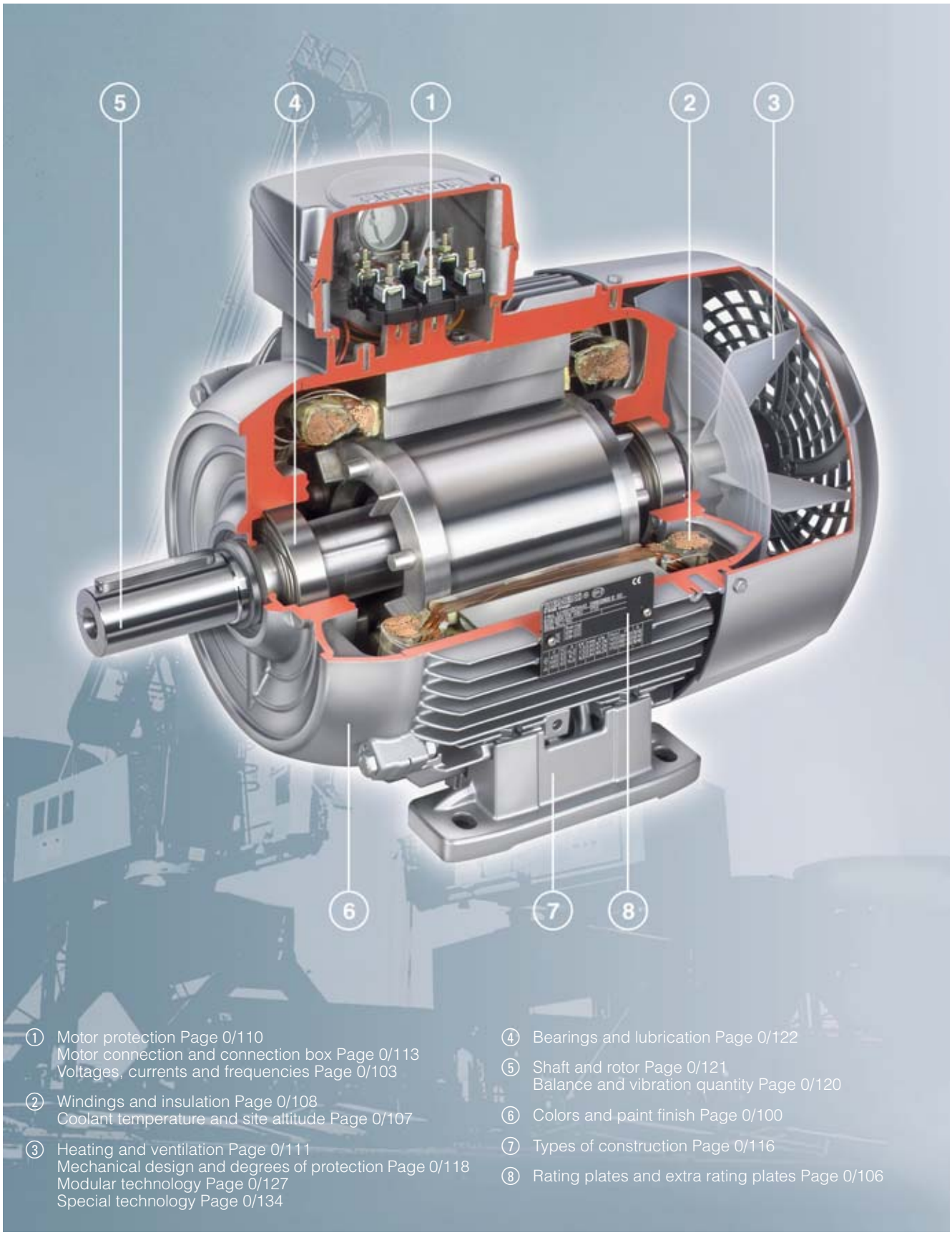

General technical data

Designs in accordance with standards and specifications

Applicable standards and specifications

The motors comply with the appropriate standards and regulations, especially those listed in the table below.

Title	IEC/EN	DIN EN
General specifications for rotating electrical machines	IEC 60034-1, IEC 60085	DIN EN 60034-1
Specification of the losses and efficiency of rotating electrical machines	IEC 60034-2	DIN EN 60034-2
Asynchronous AC motors for general use with standardized dimensions and outputs	IEC 60072 mounting dimensions only	DIN EN 50347
Restart characteristics for rotating electrical machines	IEC 60034-12	DIN EN 60034-12
Terminal designations and direction of rotation for electrical machines	IEC 60034-8	DIN EN 60034-8
Designation for type of construction, installation and connection box position	IEC 60034-7	DIN EN 60034-7
Entry to connection box	–	DIN 42925
Built-in thermal protection	IEC 60034-11	DIN EN 60034-11
Noise limit values for rotating electrical machines	IEC 60034-9	DIN EN 60034-9
IEC standard voltages	IEC 60038	DIN IEC 60038
Cooling methods for rotating electrical machines	IEC 60034-6	DIN EN 60034-6
Vibration severity of rotating electrical machines	IEC 60034-14	DIN EN 60034-14
Vibration limits	–	DIN ISO 10816
Degrees of protection of rotating electrical machines	IEC 60034-5	DIN EN 60034-5

National standards

The motors comply with the IEC or European standards listed above. The European standards replace the national standards in the following EU member states: Germany (VDE), France (NF C), Belgium (NBNC), Great Britain (BS), Italy (CEI), Netherlands (NEN), Sweden (SS), Switzerland (SEV) etc.

The motors also comply with various national standards. The following standards have been harmonized with IEC publication 60034-1 or replaced with DIN EN 60034-1 so that the motors can be operated at standard rated output.

Title	Country
CSAC22.2, No. 100	Canada
IS 325 IS 4722	India
NEK – IEC 60034-1	Norway

Tolerances for electrical data

According to DIN EN 60034, the following tolerances are permitted:
Motors which comply with DIN EN 60034-1 must have a voltage tolerance of ±5 % / frequency tolerance of ±2 % (Design A). If utilized, the admissible limit temperature of the temperature class may be exceeded by 10 K.

A tolerance of ±5 % also applies to the rated voltage range in accordance with DIN EN 60034-1. For rated voltage and rated voltage range, see Page 0/103.

Efficiency η at
$P_{rated} \leq 150$ kW: $-0.15 \cdot (1 - \eta)$
$P_{rated} > 150$ kW: $-0.1 \cdot (1 - \eta)$

With η being a decimal number.

Power factor – $\frac{1 - \cos\varphi}{6}$

- Minimum absolute value: 0.02
- Maximum absolute value: 0.07

Slip ±20 % (for motors <1 kW ±30 % is admissible)
Locked-rotor current +20 %
Locked-rotor torque –15 % to +25 %
Breakdown torque –10 %
Moment of inertia ±10 %

Energy-saving motors with European efficiency classification in accordance with EU/CEMEP (European Commitee of Manufacturers of Electrical Machines and Power Electronics)

Low-voltage motors in the output range of 1.1 to 90 kW, 2-pole and 4-pole are marked in accordance with the EU/CEMEP agreement with the efficiency class EFF2 (Improved Efficiency) or EFF1 (High Efficiency).

So that the requirements of efficiency classes EFF1 and EFF2 are fulfilled, the active parts of the motor have been optimized. The procedure for calculating the efficiency is based on the losssummation method according to IEC 60034-2.

Motors for the North American market

For motors which comply with North American regulations (NEMA, CSA, UL, etc.), it must always be checked whether the motors will be used in the US or Canada and whether they are subject to state laws.

Minimum efficiencies required by law

In 1997, an act was passed in the US to define minimum efficiencies for low-voltage three-phase motors (EPACT = Energy Policy Act). An act is in force in Canada that is largely identical, although it is based on different verification methods. The efficiency is verified for these motors for the USA using IEEE 112, Test Method B and for Canada using CSA-C390. Apart from a few exceptions, all low-voltage three-phase motors exported to the USA or Canada must comply with the legal requirements on efficiency.
The law requires minimum efficiencies for 2, 4 and 6-pole motors with a voltage of 230 and 460 V/60 Hz, in the output range of 1 to 200 HP (0.75 to 150 kW).
According to EPACT, the following are excluded from the efficiency requirements, for example.

- Motors whose frame size output classification does not correspond with the standard series according to NEMA MG1-12.
- Flange-mounting motors without feet
- Brake motors
- Converter-fed motors
- Motors with design letter C and higher

For more information on EPACT:
http://www.eren.doe.gov/

Special requirements for the USA: Energy Policy Act

The act lays down that the nominal efficiency at full load and a "CC" number (Compliance Certification) must be included on the rating plate. The "CC" number is issued by the US Department of Energy (DOE). The following information is stamped on the rating plate of EPACT motors which must be marked by law: Nominal efficiency (service factor SF 1.15), design letter, code letter, CONT, CC-Nr. CC 032A (Siemens) and NEMA MG1-12.

Special requirements for Canada: CSA – Energy Efficiency Verification

These motors fulfill the minimum efficiency requirements laid down by the CSA standard C390. These motors are available as 1LE1 and can be ordered with order code **D40** and are also marked with the CSA-E verification on the rating plate.

NEMA – Order code D30

The motors with increased efficiency according to EPACT are designed to meet the NEMA MG1-12 electrical standard and are marked accordingly. The mechanical design of all motors is compliant only to IEC, not to NEMA dimensions.
All motors in the EPACT and **D30** version correspond to NEMA Design A (i. e. standard torque characteristic in accordance with NEMA and no starting current limitation).
For Design B, C and D, a special version is required (on request).
All other 1LE1/1PC1 motors must be ordered with order code **D30**.
Data on the rating plate: Rated voltage (voltage tolerance of 10 %), nominal efficiency, design letter, code letter, CONT and NEMA MG1-12.

UL approval – Order code D31

The motors based on the 1LE1/1PC1 basic series are listed for up to 600 V by Underwriters Laboratories Inc. ("Recognition Mark" = R/C).
This is not possible in combination with the option "temperature class 180 (H) at rated output and maximal coolant temperature of 60 °C", order code N11.
According to UL, motor voltages are only certified up to 600 V, i.e. voltage codes 22, 27 or 40. For this reason, the indication 690 VY for voltage code "34" (400 VΔ/690 VY/ 50 Hz or 460 VΔ/60 Hz), for example, is omitted on the rating plate.

The "UL Recognition Mark" is included on the rating plate of the motor.

In addition, the motor is designed to meet the NEMA MG1-12 electrical standard and includes the following data on the rating plate: Rated voltage (voltage tolerance of 10 %), nominal efficiency, design letter, code letter, CONT and NEMA MG1-12. The motors must only be ordered with order code **D31**.

Externally or internally mounted components such as

- Motor protection
- Heating element
- Separately driven fan
- Brake
- Encoder
- Power connection
- Plug connector

are UL-R/C, CSA or C-US listed or used by manufacturers in accordance with regulations. It may have to be decided whether the motor is suitable for the application.
The motors can be operated with a frequency converter with 50/60 Hz.
Deviating frequency settings must be tested at final acceptance.

The following versions are possible:

- 2-pole motors, only in combination with F77 or F78 low-noise versions
- 4, 6 and 8-pole motors, only in combination with F76 metal external fan

CSA approval – Order code D40

Motors based on the 1LE1/1PC1 basic series are approved for up to 690 V in accordance with the Canadian regulations of the "Canadian Standard Association" (CSA). Externally or internally mounted components which are used are listed by CSA or are used by manufacturers in accordance with regulations. It may have to be decided whether the motor is suitable for the application.
This is not possible in combination with the option "temperature class 180 (H) at rated output and maximal coolant temperature of 60 °C", order code N11, for 1LE1 and 1PC1 motor series.

The motors must be ordered with the order code **D40**, voltage code "**90**" and order code for voltage and frequency. The CSA mark and the rated voltage (voltage tolerance of 10 %) are included on the rating plate.

When energy-saving motors (1LE1 in design EFF1) are ordered, they also include the CSA-E mark on the rating plate.

Export of low-voltage motors to China

CCC – China Compulsory Certification – Order code D01

"Small power motors" which are exported to China must be certified up to a rated output of:
2-pole: ≤ 2.2 kW
4-pole: ≤ 1.1 kW
6-pole: ≤ 0.75 kW
8-pole: ≤ 0.55 kW

The **1LE1 motors which must be certified** have been certified by the CQC (China Quality Cert. Center). When ordered with the D01 order code, the "CCC" logo and "Factory Code" are included on the rating plate and packaging.

A005216

Factory Code:

A005216 = Works Bad Neustadt
A010607 = Works Mohelnice

Note:
Chinese customs checks the need for certification of imported products by means of commodity code.

The following do not need to be certified:

- Motors imported to China which have already been installed in a machine
- Repair parts

Export of low-voltage motors to Japan

PSE Mark Japan – Order Code D46

PSE marking is a mandatory certification in Japan in accordance with the electrical devices and safety of materials act. "Small power motors" with a rated output of up to 3 kW which are exported to Japan must bear the PSE marking.

The motors concerned are marked on the rating plate with the following "PSE" logo.

General technical data

Colors and paint finish

To protect the drives against corrosion and external influences, high-quality coatings based on 2-K epoxy resin are offered in various different colors.

Type	Suitability of paint finish for climate group in accordance with DIN IEC 60721, Part 2-1	
Special finish	Worldwide (global) for outdoor use in direct sunlight and/or weather conditions. Suitable for use in the tropics for <60 % relative humidity at 40 °C	Briefly: Up to 140 °C Contin.: Up to 120 °C Also: for aggressive atmospheres up to 1 % acid and alkali concentrations or permanent dampness in sheltered rooms

Special finish system “sea air resistant” – Order code **S03**

Field of application	Resistance
• Recommended for indoor installations or outdoor installations exposed to direct weather conditions • Industrial climate with moderate SO2 exposure, inshore maritime climate, but not offshore maritime climate, e.g. for crane drives and also in the paper industry • Complies with the test requirements of DIN EN ISO 12944-2 Corrosion Category C4	• Chemical exposure to 5 % acid and caustic solution concentration • Suitable for use in the tropics up to 75 % relative humidity at 50 °C • Thermal stability from –40 to 140 °C

All motors are painted with RAL 7030 (stone gray) if the color is not specified.

Other colors in special finish must be ordered with order codes **Y51** or **Y54** and the required RAL number in plain text (for a selection of the available RAL numbers/colors, see the following page for tables for order codes **Y51** and **Y54**).

Direct sunlight may change the color. If consistent colors are required, we recommend paint based on polyurethane. Please inquire.

All paint finishes can be painted over with commercially available paints. Special paints and increased layer thickness available on request.

If required, the motors can be supplied coated only in primer, order code **S01**, or unpainted (unmachined cast-iron surfaces, but primed) using order code **S00**.

Special finish in standard RAL colors – Order code **Y54** (RAL number is required in plain text)

RAL No.	Color name	RAL No.	Color name
1002	Sand yellow	6011	Reseda green
1013	Pearl white	6019	Pastel green
1015	Light ivory	6021	Pale green
1019	Gray beige	7000	Squirrel gray
2003	Pastel orange	7001	Silver gray
2004	Pure orange	7004	Signal gray
3000	Flame red	7011	Iron gray
3007	Black red	7016	Anthracite gray
5007	Brilliant blue	7022	Umber gray
5009	Azure blue	7031	Blue gray
5010	Gentian blue	7032	Pebble gray
5012	Light blue	7033	Cement gray
5015	Sky blue	7035	Light gray
5017	Traffic blue	9001	Cream
5018	Teal blue	9002	Gray white
5019	Capri blue	9005	Jet black

Special finish in special RAL colors – Order code **Y51** (RAL number is required in plain text)

RAL No.	Color name	RAL No.	Color name	RAL No.	Color name	RAL No.	Color name
1000	Green beige	3014	Antique pink	6003	Olive green	7036	Platinum gray
1001	Beige	3015	Light pink	6004	Blue green	7037	Dusty gray
1003	Signal yellow	3016	Coral red	6005	Moss green	7038	Agate gray
1004	Golden yellow	3017	Rose	6006	Gray olive	7039	Quartz gray
1005	Honey yellow	3018	Strawberry red	6007	Bottle green	7040	Window gray
1006	Maize yellow	3020	Traffic red	6008	Brown green	7042	Traffic gray A
1007	Daffodil yellow	3022	Salmon pink	6009	Fir green	7043	Traffic gray B
1011	Brown beige	3027	Raspberry red	6010	Grass green	7044	Silk gray
1012	Lemon yellow	3031	Orient red	6012	Black green	7045	Tele gray 1
1014	Dark ivory	3032	Pearl ruby red	6013	Reed green	7046	Tele gray 2
1016	Sulfur yellow	3033	Pearl pink	6014	Yellow olive	7047	Tele gray 4
1017	Saffron yellow	4001	Red lilac	6015	Black olive	7048	Pearl mouse gray
1018	Zinc yellow	4002	Red violet	6016	Turquoise green	8000	Green brown
1020	Olive yellow	4003	Heather violet	6017	May green	8001	Ocher brown
1021	Rape yellow	4004	Claret violet	6018	Yellow green	8002	Signal brown
1023	Traffic yellow	4005	Blue lilac	6020	Chrome green	8003	Clay brown
1024	Ochre yellow	4006	Traffic purple	6022	Olive drab	8004	Copper brown
1027	Curry	4007	Purple violet	6024	Traffic green	8007	Fawn brown
1028	Melon yellow	4008	Signal violet	6025	Fern green	8008	Olive brown
1032	Broom yellow	4009	Pastel violet	6026	Opal green	8011	Nut brown
1033	Dahlia yellow	4010	Tele magenta	6027	Light green	8012	Red brown
1034	Pastel yellow	4011	Pearl violet	6028	Pine green	8014	Sepia brown
1035	Pearl beige	4012	Pearl blackberry	6029	Mint green	8015	Chestnut
1036	Pearl gold	5000	Violet blue	6032	Signal green	8016	Mahogany
1037	Sun yellow	5001	Green blue	6033	Mint turquoise	8017	Chocolate
2000	Yellow orange	5002	Ultramarine	6034	Pastel turquoise	8019	Gray brown
2001	Red orange	5003	Saphire blue	6035	Pearl green	8022	Black brown
2002	Vermilion	5004	Black blue	6036	Pearl opal green	8023	Orange brown
2008	Bright red orange	5005	Signal blue	7002	Olive gray	8024	Beige brown
2009	Traffic orange	5008	Gray blue	7003	Moss gray	8025	Pale brown
2010	Signal orange	5011	Steel blue	7005	Mouse gray	8028	Terra brown
2011	Deep orange	5013	Cobalt blue	7006	Beige gray	8029	Pearl copper
2012	Salmon orange	5014	Pigeon blue	7008	Khaki gray	9003	Signal white
2013	Pearl orange	5020	Ocean blue	7009	Green gray	9004	Signal black
3001	Signal red	5021	Water blue	7010	Tarpaulin gray	9006	White aluminum
3002	Carmine red	5022	Night blue	7012	Basalt gray	9007	Gray aluminum
3003	Ruby red	5023	Distant blue	7013	Brown gray	9010	Pure white
3004	Purple red	5024	Pastel blue	7015	Slate gray	9011	Graphite black
3005	Wine red	5025	Pearl gentian	7021	Black gray	9016	Traffic white
3009	Oxide red	5026	Pearl night blue	7023	Concrete gray	9017	Traffic black
3011	Brown red	6000	Patina green	7024	Graphite gray	9018	Papyrus white
3012	Beige red	6001	Emerald green	7026	Granite gray	9022	Pearl light gray
3013	Tomato red	6002	Leaf green	7034	Yellow gray	9023	Pearl dark gray

Coating structure and colors not specified in the catalog are available on request.

General technical data

Packaging, safety notes, documentation and test certificates

Connected in star for dispatch – Order code **M01**
The terminal board of the motor is connected in star for dispatch.

Connected in delta for dispatch – Order code **M02**
The terminal board of the motor is connected in delta for dispatch.

Packing weights

Packing weights									
For motors		For land transport							
Frame size	Type	Type of construction IM B3				Type of construction IM B5, IM V1			
	1LE1 ... - **1PC1 ... -**	In box Tare	On wooden board ISPM covered by cardboard on top and sides Tare	On battens Tare	In crate Tare	In box Tare	On wooden board ISPM covered by cardboard on top and sides Tare	On battens Tare	In crate Tare
		kg	kg	kg	kg	kg	kg	kg	kg
100 L	**1A.4**	–	5.0	–	–	–	5.0	–	–
	1A.5	–	5.0	–	–	–	5.0	–	–
	1A.6	–	5.0	–	–	–	5.0	–	–
112 M	**1B.2**	–	5.0	–	–	–	5.0	–	–
	1B.6	–	5.0	–	–	–	5.0	–	–
132 S	**1C.0**	4.7	–	–	–	5.2	–	–	–
	1C.1	4.7	–	–	–	5.2	–	–	–
132 M	**1C.2**	4.7	–	–	–	5.2	–	–	–
	1C.3	4.7	–	–	–	5.2	–	–	–
	1C.6	8.7	–	–	–	9.2	–	–	–
160 M	**1D.2**	4.8	–	–	–	5.7	–	–	–
	1D.3	4.8	–	–	–	5.7	–	–	–
160 L	**1D.4**	4.8	–	–	–	5.7	–	–	–
	1D.6	8.8	–	–	–	9.7	–	–	–

Data apply for individual packaging. Packing in wire-lattice pallets can be used, order code **B99**.

Safety notes

If the motors are to be delivered without safety and commissioning notes, a customer's declaration of renouncement is required.

Without safety and commissioning note – Order code **B00**

The motors are supplied with only one set of safety and commissioning notes per wire-lattice pallet for most motor types and frame sizes.

Complete with one set of safety and commissioning notes per wire-lattice pallet – Order code **B01**

Documentation

The following documents are optionally available:

- Printed operating instructions English/German enclosed – Order code **B04**
- All manuals for low-voltage motors, geared motors and low-voltage converters are now available on DVD in 5 languages, see "SD Manual Collection for CA 01" in catalog part 11 "Appendix".

Test certificates

Acceptance test certificate 3.1 according to **EN 10204** – Order code **B02**

An acceptance test certificate 3.1 according to EN 10204 can be supplied for most motors.

Type test with heat run for horizontal motors, with acceptance – Order code **B83**

During the type test, a temperature-rise test is performed; no-load, short-circuit and load characteristics are recorded; the iron losses and friction losses are determined and the efficiency is calculated from the summed losses. This option is only applicable to motors with a horizontal type of construction. The acceptance is carried out by an external representative (e.g. customer, classification society).

Voltages, currents and frequencies

Standard voltages

EN 60034-1 differentiates between Category A (combination of voltage deviation ±5 % and frequency deviation ±2 %) and Category B (combination of voltage deviation ±10 % and frequency deviation +3/–5 %) for voltage and frequency fluctuations. The motors can supply their rated torque in both Category A and Category B. In Category A, the temperature rise is approx. 10 K higher than during rated duty.

Standard	Category	Category
60034 – 1	A	B
Voltage deviation Frequency deviation	±5 % ±2 %	±10 % +3 %/–5 %
Rating plate data stamped with rated voltage a (e.g. 230 V)	a ±5 % (e.g. 230 V ±5 %)	a ±10 % (e.g. 230 ±10 %)
Rating plate data stamped with rated voltage ranges b to c (e.g. 220 to 240V)	b –5 % to c +5 % (e.g. 220 –5 % to 240 +5 %)	b –10 % to c +10 % (e.g. 220 – 10 % to 240 +10 %)

According to the standard, longer duty is not recommended for Category B. See “Rating plates and extra rating plates” for details of the rating plate inscriptions and corresponding examples. The selection and ordering data state the rated current at 400 V. The DIN IEC 60038 standard specifies a tolerance of ±10 % for mains voltages of 230 V, 400 V and 690 V. The rating plates of motors with voltage code 22 or 34 specify a rated voltage range in addition to the rated voltage (see table below).

The rated currents at 380/420 V are specified in the table “Rated currents for rated voltage range 380 V to 420 V at 50 Hz” and on the rating plate.

Mains voltages	Rated voltage range	Voltage code
1LE1 motors		
230 VΔ/400 VY, 50 Hz	220 ... 240 VΔ/380 ... 420 VY, 50 Hz	22
400 VΔ/690 VY, 50 Hz	380 ... 420 VΔ/660 ... 725 VY, 50 Hz	34
500 VY, 50 Hz	–	27
500 VΔ, 50 Hz	–	40

Non-standard voltages and/or frequencies

The tolerance laid down by DIN EN 60034-1 applies to all non-standard voltages.
Order codes have been allocated for a number of non-standard voltages at 50 or 60 Hz. They are ordered by specifying the code digit 9 for voltage in the 12th position of the Order No. as well as the code digit 0 in the 13th position of the Order No. and the appropriate order code.

M1Y Non-standard winding for voltages between 200 V and 690 V and rated outputs.
For voltages and rated outputs outside the range, please inquire.

Motor series	Frame size	Rated voltages that are available for **M1Y** Lowest/highest voltage in V for	
		Delta connection	Star connection
1LE1	100 … 160	200/690	250/690

Order codes for other rated voltages are listed under “Order No. supplements” in the “Selection and ordering data” as well as “Special versions” under “Voltages”.

General technical data

Rated currents for rated voltage range 380 V to 420 V at 50 Hz

Motor type	Frame size	Currents for voltage and number of poles							
		380 V	420 V	380 V	420 V	380 V	420 V	380 V	420 V
		2-pole		4-pole		6-pole		8-pole	
		I	*I*	*I*	*I*	*I*	*I*	*I*	*I*
		A	A	A	A	A	A	A	A
General Line motors with shorter delivery time Self-ventilated energy-saving motors with improved efficiency – Aluminum series 1LE1 Forced-air cooled motors without external fan and fan cover with improved efficiency – Aluminum series 1LE1									
1LE1002-1A.4	100 L	6.3	5.7	5.0	4.9	3.75	4.15	2.8	3.3
1LE1002-1A.5	100 L	–	–	6.4	6.1	–	–	3.65	4.1
1LE1002-1B.2	112 M	8.3	7.5	8.4	8.1	5.4	5.5	4.0	4.4
1LE1002-1C.0	132 S	10.9	10.3	11.5	11.4	7.3	7.7	5.9	6.0
1LE1002-1C.1	132 S	14.5	13.9	–	–	–	–	–	–
1LE1002-1C.2	132 M	–	–	15.2	15.2	9.3	9.4	7.9	8.1
1LE1002-1C.3	132 M	–	–	–	–	13.7	12.9	–	–
1LE1002-1D.2	160 M	21.7	20.7	22.4	22.8	17.0	17.7	10.5	11.6
1LE1002-1D.3	160 M	29.6	28.9	–	–	–	–	13.8	14.6
1LE1002-1D.4	160 L	35.0	33.5	30.0	30.2	22.3	24.7	18.9	19.4
Self-ventilated energy-saving motors with high efficiency – Aluminum series 1LE1 Forced-air cooled motors without external fan and fan cover with high efficiency – Aluminum series 1LE1									
1LE1001-1A.4	100 L	6.1	6.1	4.65	4.65	3.55	3.55	2.65	2.95
1LE1001-1A.5	100 L	–	–	6.2	6.1	–	–	3.85	4.35
1LE1001-1B.2	112 M	7.8	7.6	8.3	8.2	5.1	5.0	4.3	4.3
1LE1001-1C.0	132 S	10.1	10.5	11.4	11.4	7.0	7.1	6.6	6.6
1LE1001-1C.1	132 S	14.2	13.7	–	–	–	–	–	–
1LE1001-1C.2	132 M	–	–	14.8	14.4	8.6	8.9	7.9	8.2
1LE1001-1C.3	132 M	–	–	–	–	12	11.9	–	–
1LE1001-1D.2	160 M	20.0	21.0	21.5	20.5	16.1	15.8	9.8	9.6
1LE1001-1D.3	160 M	28.0	27.0	–	–	–	–	13.4	13.3
1LE1001-1D.4	160 L	34.0	33.0	28.5	27.5	22.5	21.5	17.5	16.8
Self-ventilated motors with increased output with improved efficiency – Aluminum series 1LE1									
1LE1002-1A.6	100 L	8.1	7.9	8.5	8.5	5.4	5	–	–
1LE1002-1B.6	112 M	11.2	10.2	12	10.8	7.5	8.0	–	–
1LE1002-1C.6	132 M	20.3	18.9	21.8	21.3	17.0	17.6	–	–
1LE1002-1D.6	160 L	40.2	37.9	36.1	35.5	33.5	34.0	–	–
Self-ventilated motors with increased output and high efficiency – Aluminum series 1LE1									
1LE1001-1A.6	100 L	7.8	7.6	8.3	8.4	5.0	4.95	–	–
1LE1001-1B.6	112 M	10.4	9.8	11.2	11.1	6.6	6.5	–	–
1LE1001-1C.6	132 M	20	19.1	21.5	21	16.5	16.5	–	–
1LE1001-1D.6	160 L	40.0	37.5	35.5	34.5	30.5	29.0	–	–

Outputs

The outputs or rated outputs are listed in the selection tables for both 50 Hz and 60 Hz.

Assignment of the standard power kW-HP and vice versa in accordance with IEC

kW · 1.341 = HP
HP · 0.746 = kW

P_{rated} kW	P_{rated} HP	P_{rated} kW	P_{rated} HP	P_{rated} kW	P_{rated} HP	P_{rated} kW	P_{rated} HP	P_{rated} kW	P_{rated} HP	P_{rated} kW	P_{rated} HP
0.06	0.08	0.37	0.5	2.2	3	11	15	37	50	110	150
0.09	0.12	0.55	0.75	3	4	15	20	45	60	132	200
0.12	0.16	0.75	1	4	5	18.5	25	55	75	160	250
0.18	0.25	1.1	1.5	5.5	7.5	22	30	75	100	200	300
0.25	0.33	1.5	2	7.5	10	30	40	90	125		

Efficiency, power factor, rated torque, rated speed and direction of rotation

Efficiency and power factor

The efficiency η and power factor cos φ for each rated output are listed in the selection tables in the individual sections of this catalog.

For EFF1 and EFF2 motors, the 3/4-load-efficiency is also indicated in the selection tables.

The part-load values stated in the two tables below are averages; precise values can be provided on request.

Part-load efficiency in % at 1/4 of full load	1/2	3/4	**4/4**	5/4
93	96	97	**97**	96.5
92	95	96	**96**	95.5
90	93.5	95	**95**	94.5
89	92.5	94	**94**	93.5
88	91.5	93	**93**	92.5
87	91	92	**92**	91.5
86	90	91	**91**	90
85	89	90	**90**	89
84	88	89	**89**	88
80	87	88	**88**	87
79	86	87	**87**	86
78	85	86	**86**	85
76	84	85	**85**	83.5
74	83	84	**84**	82.5
72	82	83	**83**	81.5
70	81	82	**82**	80.5
68	80	81	**81**	79.5
66	79	80	**80**	78.5
64	77	79.5	**79**	77.5
62	75.5	78.5	**78**	76.5
60	74	77.5	**77**	75
58	73	76	**76**	74
56	72	75	**75**	73
55	71	74	**74**	72
54	70	73	**73**	71
53	68	72	**72**	70
52	67	71	**71**	69
51	66	70	**70**	68
50	65	69	**69**	67
49	64	67.5	**68**	66
48	62	66.5	**67**	65
47	61	65	**66**	64
46	60	64	**65**	63
45	59	63	**64**	62
44	57	62	**63**	61
43	56	60.5	**62**	60.5
42	55	59.5	**61**	59.5
41	54	58.5	**60**	58.5

Part-load power factor at 1/4 of full load	1/2	3/4	**4/4**	5/4
0.70	0.86	0.90	**0.92**	0.92
0.65	0.85	0.89	**0.91**	0.91
0.63	0.83	0.88	**0.90**	0.90
0.61	0.80	0.86	**0.89**	0.89
0.57	0.78	0.85	**0.88**	0.88
0.53	0.76	0.84	**0.87**	0.87
0.51	0.75	0.83	**0.86**	0.86
0.49	0.73	0.81	**0.85**	0.86
0.47	0.71	0.80	**0.84**	0.85
0.45	0.69	0.79	**0.83**	0.84
0.43	0.67	0.77	**0.82**	0.83
0.41	0.66	0.76	**0.81**	0.82
0.40	0.65	0.75	**0.80**	0.81
0.38	0.63	0.74	**0.79**	0.80
0.36	0.61	0.72	**0.78**	0.80
0.34	0.59	0.71	**0.77**	0.79
0.32	0.58	0.70	**0.76**	0.78
0.30	0.56	0.69	**0.75**	0.78
0.29	0.55	0.68	**0.74**	0.77
0.28	0.54	0.67	**0.73**	0.77
0.27	0.52	0.63	**0.72**	0.76
0.26	0.50	0.62	**0.71**	0.76

Rated speed and direction of rotation

The rated speeds are applicable for the rated data. The synchronous speed changes proportionally with the line frequency. The motors are suitable for clockwise and counter-clockwise rotation.

If U1, V1, W1 are connected to L1, L2, L3, clockwise rotation results as viewed onto the drive-end shaft extension. Counter-clockwise rotation is achieved by swapping two phases (see also “Heating and ventilation”, Page 0/111).

Rated torque

The rated torque in Nm delivered at the motor shaft is

$$M = \frac{9.55 \cdot P \cdot 1000}{n}$$

P Rated output in kW
n Speed in rpm

Note:
If the voltage deviates from its rated value within the admissible limits, the locked-rotor torque, the pull-up torque and the breakdown torque vary with the approximate square of the value, but the locked-rotor current varies approximately linearly.

In the case of squirrel-cage motors, the locked-rotor torque and breakdown torque are listed in the selection tables as multiples of the rated torque.
The normal practice is to start squirrel-cage motors directly on line. The torque class indicates that with direct-on-line starting, even if there is an undervoltage of –5 %, it is possible to start up the motor against a load torque of

- 160 % for CL 16
- 130 % for CL 13
- 100 % for CL 10
- 70 % for CL 7
- 50 % for CL 5

of the rated torque.

General technical data

Rating plate and extra rating plates

DIN EN 60034-1 lays down that the approximate total weight for all motors is indicated on the rating plate.

An extra rating plate can be supplied loose for all motors, order code **M10**.

Non-rusting steel rating plate, for scratch, heat, cold and acid resistance can be obtained, order code **M11**.

Supplementary data (max. of 20 characters) can be indicated on the rating plate or extra rating plate and on the packaging label, order code **Y84**.

An extra rating plate for identification codes is also possible, order code **Y82**.
An extra rating plate or a rating plate with different rating plate data can also be ordered, order code **Y80**.

In the standard version, the rating plate is available in international format or in the German/English language. The language for the rating plate can be ordered by specifying it in plain text. An overview of the languages that can be ordered, at additional cost in some cases, is provided in the table below.

Overview of the languages on the rating plate

Motor type	Frame size	Rating plate								Double rating plate 50/60 Hz data for	
		International	German (de)	English (en)	German (de)/ English (en)	French (fr)/ Spanish (es)	Italian (it)	Portuguese (pt)	Russian (ru)	500 VY and 575 VY 500 VΔ and 575 VΔ	230 VΔ/ 400 VY and 460 V 400 VΔ/ 690 VY and 460 VΔ
1LE1/1PC1	100 … 160	◻		○						◻	◻

◻ Standard version
○ Without additional charge

Example of a rating plate

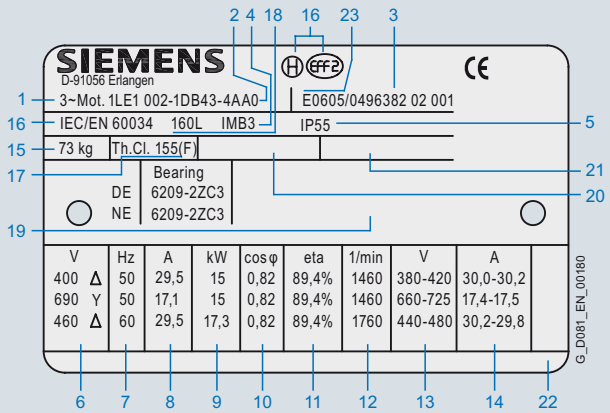

1 Machine type: Three-phase Low-voltage motor
2 Order No.
3 Factory number (Ident No., serial number)
4 Type of construction
5 Degree of protection
6 Rated voltage [V] and winding connections
7 Frequency [Hz]
8 Rated current [A]
9 Rated output [kW]
10 Power factor [cos φ]
11 Efficiency
12 Rated speed [rpm]
13 Voltage range [V]
14 Current range [A]
15 Machine weight [kg]
16 Standards and regulations
17 Temperature class
18 Frame size
19 Additional details (optional)
20 Operating temberature range (only if it deviates from normal)
21 Site altitude (only when higher than 1000 m)
22 Customer data (optional)
23 Date of manufacture YYMM

Coolant temperature and site altitude

The rated output specified in the selection tables is applicable for continuous duty in accordance with DIN EN 60034-1 at the frequency of 50 Hz, a coolant temperature (CT) or ambient temperature of 40 °C and a site altitude (SA) up to 1000 m above sea level.

For higher coolant temperatures and/or site altitudes greater than 1000 m above sea level, the specified motor output must be reduced using the factor k_{HT}.

Depending on the frame size of the motor or the number of poles, special windings may be added to the motors for different operating conditions.

This results in an admissible output of the motor of:

$P_{adm.} = P_{rated} \cdot k_{HT}$

If the admissible motor output is no longer adequate for the drive, it should be checked whether the motor with the next higher rated output fulfills the requirements.

Abbreviation	Description	Unit
$P_{adm.}$	Admissible motor output	kW
P_{rated}	Rated output	kW
k_{HT}	Factor for abnormal coolant temperature and/or site altitude	

The motors are designed for temperature class 155 (F) and used in temperature class 130 (B). Under non-standard operating conditions, if they are to be used in class 130 (B), the admissible output must be determined from the tables below.

Reduction factor k_{HT} for different site altitudes and/or coolant temperatures

Site altitude above **sea level**	Site altitude above sea level Coolant temperature					
m	<30 °C	30 °C ... 40 °C	45 °C	50 °C	55 °C	60 °C
1000	1.07	1.00	0.96	0.92	0.87	0.82
1500	1.04	0.97	0.93	0.89	0.84	0.79
2000	1.00	0.94	0.90	0.86	0.82	0.77
2500	0.96	0.90	0.86	0.83	0.78	0.74
3000	0.92	0.86	0.82	0.79	0.75	0.70
3500	0.88	0.82	0.79	0.75	0.71	0.67
4000	0.82	0.77	0.74	0.71	0.67	0.63

Coolant temperature and site altitude are rounded-off to 5 °C or 500 m.

For the following outputs, rms values are specified for coolant temperatures (CT) of 45 °C and 50 °C that must be specified when ordering.

Power	Admissible output at 50 Hz	
	for CT 45 °C	for CT 50 °C
kW	kW	kW
11	10.5	10
15	14.5	13.8
18.5	17.8	17
22	21	20
30	29	27.5

For details of derating for use in class 155 (F), see “DURIGNIT IR 2000 insulation system”.

Motors for coolant temperatures other than 40 °C or site altitudes higher than 1000 m above sea level for use in temperature class 130 (B) must always be ordered with the supplementary order code “**-Z**” and plain text. In the case of extreme derating, the operating data for the motors will also be less favorable due to partial utilization.

The following special versions are possible for 1LE1 and 1PC1 motors:

- Motors for coolant temperatures from –40 to +40 °C order code **D03**
- Motors for coolant temperatures from –30 to +40 °C order code **D04**

When ordering with order codes **D03** and **D04** in combination with mountings, the respective technical data have to be observed; request required.

For details of order codes for use in temperature class 155 (F), see “DURIGNIT IR 2000 insulation system” under “Windings and insulation”, Page 0/108.

The following applies to all motors:
The motors can withstand 1.5 times the rated current at rated voltage and frequency for two minutes (DIN EN 60034).

Ambient temperature:
All motors can be used in the standard version at ambient temperatures between –20 to +40 °C.
Motors can be used in temperature class 155 (F)

- at 40 °C with service factor 1.1, i.e. the motor can be continuously overloaded with 10 % of the rated output in the case of EFF2 motors
- at 40 °C with service factor 1.15, i.e. the motor can be continuously overloaded with 15 % of the rated output in the case of EFF1 motors
- above 40 °C at rated output.

When motors are used in temperature class 130 (B) for higher ambient temperatures and/or site altitudes, derating occurs in accordance with the table “Reduction factor k_{HT} for different site altitudes and/or coolant temperatures”.
For motors ex stock, the service factor is indicated on the rating plate.
For other temperatures, special measures are necessary.
When brakes are to be mounted on at temperatures below freezing, please inquire.

General technical data

Windings and insulation

DURIGNIT IR 2000 insulation system

The DURIGNIT IR 2000 insulation system comprises high-grade enameled wires and insulating sheet materials combined with solvent-free impregnating resin.
The system ensures a high level of mechanical and electrical strength as well as good serviceability and a long motor life.
The insulation system protects the winding against aggressive gases, vapors, dust, oil and increased air humidity. It can withstand the usual vibration stressing.
The insulation is suitable up to an absolute air humidity of 30 g water per m^3 of air. Moisture condensation should be prevented from forming on the winding. Please inquire if higher values are required.

Please inquire about extreme applications.

Restarting against residual field and opposite phase

All motors can be reclosed against 100 % residual field after a mains voltage failure.

Winding and insulation design with regard to temperature class and air humidity

All motors are designed for temperature class 155 (F).
At rated output with mains-fed operation, the motors can be used in temperature class 130 (B).

Temperature class 155 (F), used according to 155 (F), with service factor (SF)
For all 1LE1/1PC1 motors for mains-fed operation for the rated output given in the selection table and rated voltage, a service factor of 1.1 can be specified for EFF2 motors (SF = 1.15 for EFF1 motors) also for motors with increased output.
Order code **N01**

Temperature class 155 (F), used according to 155 (F), for increased output
When used according to temperature class 155 (F), the rated output as specified in the selection and ordering data can be increased by 10 % for EFF2 motors (15 % for EFF1 motors) also for motors with increased output.
Order code **N02**

Temperature class 155 (F), used according to 155 (F), with increased coolant temperature
For mains-fed motors at outputs in accordance with the catalog, the coolant temperature can be raised to 55 °C.
Order code **N03**

The service factor (SF) is not indicated on the rating plate for order codes N02 and N03.
For converter-fed operation at the output specified in the catalog, the motors are used in accordance with temperature class 155 (F). Order codes N01, N02 and N03 are not possible. This applies to motors up to 460 V.

Temperature class 155 (F), used according to 155 (F), other requirements
The motors can be ordered according to temperature class 155 (F) for use according to temperature class 155 (F) with other customized requirements if they are specified in plain text in the order.
Order code **Y52**

Temperature class 180 (H) at rated output and maximum coolant temperature CT 60 °C

For motor series 1LE1 and 1PC1, use according to temperature class 180 (H) is permitted at rated output and at a maximum coolant temperature of 60 °C. This does not apply to motor series 1LE1 and 1PC1 with UL approval (order code D31) and CSA approval (order code D40). The specified grease life applies to a coolant temperature of 40 °C. For a 10 K increase in coolant temperature, the grease life or lubrication interval is halved.
Order code **N11**

Temperature class 155 (F), used according to 130 (B), coolant temperature 45 °C, approx. 4 % derating
For the 1LE1 motor series, a version for temperature class 155 (F) can be used according to temperature class 130 (B) at a maximum coolant temperature of 45 °C with a 4 % reduction in rated output.
Order code **N05**

Temperature class 155 (F), used according to 130 (B), coolant temperature 50 °C, approx. 8 % derating
For the 1LE1 motor series, a version for temperature class 155 (F) can be used according to temperature class 130 (B) at a maximum coolant temperature of 50 °C with a 8 % reduction in rated output.
Order code **N06**

Temperature class 155 (F), used according to 130 (B), coolant temperature 55 °C, approx. 13 % derating
For the 1LE1 motor series, a version for temperature class 155 (F) can be used according to temperature class 130 (B) at a maximum coolant temperature of 55 °C with a 13 % reduction in rated output.
Order code **N07**

Temperature class 155 (F), used according to 130 (B), coolant temperature 60 °C, approx. 18 % derating
For the 1LE1 motor series, a version for temperature class 155 (F) can be used according to temperature class 130 (B) at a maximum coolant temperature of 60 °C with a 18 % reduction in rated output.
Order code **N08**

Increased air temperature/humidity with 30 to 60 g water per m^3 of air

For motors of series 1LE1 and 1PC1, a version can be ordered for increased air humidity of between 30 and 60 g water per m^3 of air depending on the temperature as listed in the table below. This option includes condensation drainage holes (order code H03).
Order code **N20**
Please contact your local Siemens office if order code N20 is to be combined with additional mountings (eg. rotary pulse encoders, brakes).

Increased air temperature/humidity with 60 to 100 g water per m^3 of air

For motors of series 1LE1 and 1PC1, a version can be ordered for increased air humidity of between 60 and 100 g water per m^3 of air depending on the temperature as listed in the table below. This option includes condensation drainage holes (order code H03).
Order code **N21**
Please contact your local Siemens office if order code N21 is to be combined with additional mountings (eg. rotary pulse encoders, brakes).

Absolute/relative conversion of air humidity

Relative humidity	Temperature							
	20 °C	30 °C	40 °C	50 °C	60 °C	70 °C	80 °C	90 °C
10 %	2	3	5	8	13	20	29	42
15 %	3	5	8	12	19	30	44	63
20 %	3	6	10	17	26	39	58	84
25 %	4	8	13	21	32	49	73	105
30 %	5	9	15	25	39	59	87	126
35 %	6	11	18	29	45	69	102	146
40 %	7	12	20	33	52	79	116	167
45 %	8	14	23	37	58	89	131	188
50 %	9	15	26	41	65	98	145	209
55 %	10	17	28	46	71	108	160	230
60 %	10	19	31	50	78	118	174	251
65 %	11	20	33	54	84	128	189	272
70 %	12	21	36	58	91	138	203	293
75 %	13	23	38	62	97	148	218	314
80 %	14	24	41	66	104	157	233	335
85 %	15	26	43	70	110	167	247	356
90 %	16	27	46	74	117	177	262	377
95 %	16	29	49	79	123	187	276	398
100 %	17	30	51	83	130	197	291	419

The values in the table with a blue background are covered by the standard version (up to 30 g water per m^3 of air).

The values in the table with a light gray background are covered by order code **N20** (30 to 60 g of water per m^3 of air).

The values in the table with a dark gray background are covered by order code **N21** (60 to 100 g of water per m^3 of air).

Please contact your local Siemens office regarding requirements exceeding 100 g water per m^3 of air

Restarting against residual field and opposite phase

All motors can be reclosed against 100 % residual field after a mains voltage failure.

Motor protection

The order variants for motor protection are coded with letters in the 15th position of the Order No. and, if necessary, using order codes.

In the standard version, the motor is designed without motor protection.
15th position of Order No. letter **A**

A distinction is made between current-dependent and motor-temperature-dependent protection devices.

Current-dependent protection devices

Fuses are only used to protect mains cables in the event of a short-circuit. They are not suitable for overload protection of the motor.

The motors are usually protected by delayed overload protection devices (circuit breakers for motor protection or overload relays).

This protection is current-dependent and is particularly effective in the case of a locked rotor.

For standard duty with short start-up times and starting currents that are not excessive and for low numbers of switching operations, motor protection switches provide adequate protection. Motor protection switches are not suitable for heavy starting duty or large numbers of switching operations. Differences in the thermal time constants for the protection equipment and the motor results in unnecessary early tripping when the protection switch is set to rated current.

Motor-temperature-dependent protection devices

Temperature detectors installed in the motor winding are suitable protection devices in the case of slowly rising motor temperature.

When a limit temperature is reached, these **bimetal switches** (NC contacts) can deactivate an auxiliary circuit. The circuit can only be reclosed following a considerable fall in temperature. When the motor current rises quickly (e.g. with a locked rotor), these switches are not suitable due to their large thermal time constants.
Temperature detectors for tripping
15th position of Order No. letter **Z** and order code **Q3A**

The most comprehensive protection against thermal overloading of the motor is provided by **PTC thermistors (thermistor motor protection)** installed in the motor winding. The temperature of the winding can be accurately monitored thanks to its low heating capacity and the excellent heat contact with the winding. When a limit temperature is reached (rated tripping temperature), the PTC thermistors undergo a step change in resistance. This is evaluated by a tripping unit and can be used to open auxiliary circuits. The PTC thermistors themselves cannot be subjected to high currents and voltages. This would result in destruction of the semiconductor. The switching hysteresis of the PTC thermistor and tripping unit is low, which supports fast restarting of the drive. Motors with this type of protection are recommended for heavy duty starting, switching duty, extreme changes in load, high ambient temperatures or fluctuating supply systems.

Motor protection with PTC thermistors with 3 embedded temperature sensors for tripping. In the connection box, 2 auxiliary terminals are required.
15th position of Order No. letter **B**

The temperature detectors have the following current carrying capacity and switching capacity:
230 V AC cosφ: 2.5 A
24 V DC: 1.6 A

Two sets of three temperature sensors are used if a warning is required before the motor is shut down (tripped). The warning is normally set to 10 K below the tripping temperature.

Motor protection with PTC thermistors with 6 embedded temperature sensors for alarm and tripping. In the connection box, 4 auxiliary terminals are required.
15th position of Order No. letter **C**

In order to achieve full thermal protection, it is necessary to combine a thermally delayed overcurrent release and a PTC thermistor. For full motor protection implemented only with PTC thermistors, please inquire.

Motor temperature detection with converter-fed operation

KTY 84-130 temperature sensor

This sensor is a semiconductor that changes its resistance depending on temperature in accordance with a defined curve.

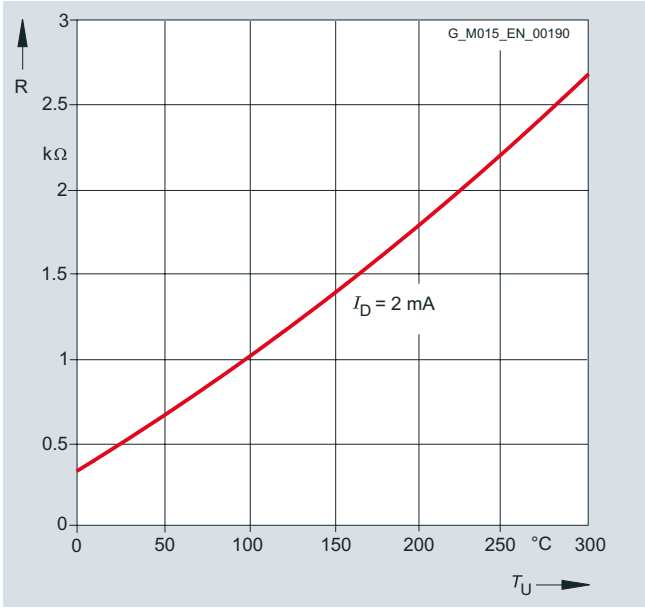

KTY 84-130 temperature sensor characteristic

Some converters from Siemens determine the motor temperature using the resistance of the temperature sensor. They can be set to a required temperature for alarm and tripping.

Motor temperature detection with embedded temperature sensor KTY 84-130. Two auxiliary terminals are required in the connection box.
15th position of Order No. letter **F**

The temperature sensor is embedded in the winding head of the motor in the same manner as a PTC thermistor. Evaluation is performed, for example, in the converter.
For mains-fed operation, the temperature monitoring device 3RS10 that is part of the protection equipment can be ordered separately. For further details, see Catalog LV 1,
Order No.: E86060-K1002-A101-A7-7600.

With NTC thermistors (mainly in the case of special machines), the tripping temperature can also be adjusted later on the tripping unit. NTC thermistors for tripping
15th position of Order No. letter **Z** and order code **Q2A**

Heating and ventilation

Anti-condensation heaters

Supply voltage 230 V (1~)
Order code **Q02**

Supply voltage 115 V (1~)
Order code **Q03**

Motors whose windings are at risk of condensation due to the climatic conditions, e.g. inactive motors in humid atmospheres or motors that are subjected to widely fluctuating temperatures, can be equipped with anti-condensation heaters.
An additional M16 x 1.5 cable entry is provided for the connecting cable in the connection box.
Anti-condensation heaters must not be switched on during operation.

Motor series	Frame size	Heater output of anti-condensation heaters in Watt (W) Supply voltage at 230 V Order code **Q02**	115 V Order code **Q03**
1LE1/1PC1	100 ... 112	50	50
1LE1/1PC1	132 … 160	100	100

Instead of an anti-condensation heater, another possibility (at no extra cost) is connection of a voltage that is approximately 4 to 10 % of the rated motor voltage to stator terminals U1 and V1; 20 to 30 % of the rated motor current are sufficient to heat the motor.

Fans/Separately driven fans

1LE1 motors of frame sizes 100 ... 160 have radial-flow fans in the standard version (with the exception of 1LE1 with option F90 – version "Forced-air cooled motors without external fan and fan cover") that cool regardless of the direction of rotation of the motor (cooling method IC 411 acc. to DIN EN 60034-6). The air flow is forced from the non-drive-end (NDE) to the drive end (DE).
For details of separately driven fans for frame sizes 100 ... 160, see Page 0/129.

Supply voltage of separately driven fan for 1LE1 motors:
The supply voltage tolerance of the separately driven fan is ±5 %; for voltage ranges, Page 0/129.

When the motor is mounted and the air intake is restricted, it must be ensured that a minimum clearance is maintained between the fan cover and the wall. This clearance is calculated from the difference between the protective cover and the fan cover (differential dimension LM – L) or is specified in the detailed dimension drawing (see also Dimensional drawings from Page 1/68).

For design of the fan/separately driven fan and the fan cover, see the table below.

Motor series	Frame size	Fan material	Fan cover material
1LE1	100 … 160	plastic	plastic [1)]

Metal external fan impeller

The standard fan impeller made of plastic can be replaced with a fan impeller made of metal. This version can be supplied 1LE1 (with the exception of 1LE1 with option F90 – version "Forced-air cooled motors without external fan and fan cover"). With the 1LE1 mortor series, the metal fan can also be used for converter-fed operation.
A metal external fan is already included for the low-noise version.
Up to frame size 160, the metal external fan impeller is manufactured from sheet aluminum or steel.
Order codes **F76**

Fan cover for textile industry

For motors 1LE1 (with the exception of 1LE1 with option F90 – version "Forced-air cooled motors without external fan and fan cover"), the fan cover can be used in the standard version for the textile industry.
For motor series 1LE1 (with the exception of 1LE1 with option F90 – version "Forced-air cooled motors without external fan and fan cover"), a version of the fan cover can be supplied specially for the textile industry. This has a protective cover and is made of non-corrosive sheet steel.

When a fan cover is mounted for the textile industry, the length of the motor increases by 64 mm for frame sizes 100/112 and by 71 mm for frame sizes 132/160.
Order code **F75**

Sheet metal fan cover

For 1LE1 motor series (with the exception of 1LE1 with option F90 – version "Forced-air cooled motors without external fan and fan cover"), the fan cover can be supplied in sheet metal instead of plastic.
Order code **F74**

[1)] The sheet metal fan cover is used for type of constuction codes **A, D, F, H, J, K, L, N, T, U, V** in combination with option **H03** (condensation drainage holes). Mounted separately driven fans and brakes are only available for versions with sheet metal fan covers.

General technical data

Necessary minimum cooling air flow for forced-air-cooled motors in standard duty

The required cooling air flow indicated in the selection table applies to continuous duty according to DIN EN 60034-1 at a coolant temperature (CT) and ambient temperature, respectively, of 40 °C and a site altitude (SA) of up to 1000 m above sea level.

In the motor version without external fan and fan cover, order code **F90**, the motor is located in the air flow of the fan to be driven which must drive the minimum cooling air flow over the motor housing. The minimum air flow must pass closely over the housing (comparable to self-ventilation of the motor). Otherwise, higher air flows are required to comply with admissible motor heating levels. For a higher cooling air flow, the operating temperature of the motor can be reduced.

Frame size	Required cooling air flow for number of poles									
	2		4				6		8	
	EFF1/EFF2		EFF1		EFF2		EFF1/EFF2		EFF1/EFF2	
	50 Hz	60 Hz	50 Hz	60 Hz	50 Hz	60 Hz	50 Hz	60 Hz	50 Hz	60 Hz
	m^3/min.	m^3/min.	m^3/min.	m^3/min.	m^3/min.	m^3/min.	m^3/min.	m^3/min.	m^3/min.	m^3/min.
100	3.8	4.4	2.1	2.6	2.3	2.8	1.5	1.8	1.2	1.3
112	5.0/5.4 [1)]	5.7/6.1 [1)]	2.9	3.5	2.9	3.5	1.9	2.3	1.4	1.6
132	6.3	7.3	4.6	5.7	4.6	5.7	3.1	3.8	2.4	2.9
160	10.9	13.3	6.7	8.1	7.6	9.1	5	6.1	3.8	4.5

[1)] Value: EFF1/EFF2

Motor connection and connection box

Connection, circuit and connection box

Location of the connection box

The order variants for motor connection are coded with digits in the 16th position of the Order No.

The connection box of the motor can be mounted in four different locations or positions. The position of the connection box must always be viewed from the drive end (DE).

The standard position of the connection box for *General Line motors* is on top
16th position of Order No. digit **0**.

The standard position of the connection box for all other motors is on top
16th position of Order No. digit **4**.

For all motors with feet (apart from motors with increased output), cast feet are standard. If rotation of the connection box in the future has to be provided for, it is recommended that the option “Screwed-on feet” (instead of cast feet), order code **H01**, is ordered.
For motors with feet and increased output, screwed-on feet are standard. The connection box can be rotated later.

Connection box on RHS
16th position of Order No. digit **5**.

Connection box on LHS
16th position of Order No. digit **6**.

Connection box bottom
16th position of Order No. digit **7**.

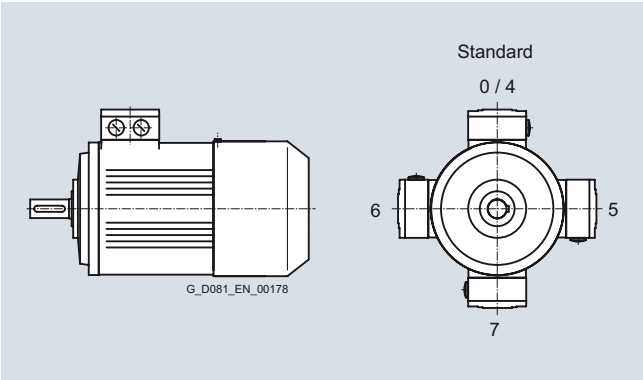

Location of the connection box with the corresponding digits in the 16th position of the order number

The number of winding ends depends on the winding design. Three-phase motors are connected to the three phase conductors L1, L2 and L3 of a three-phase system. The rated voltage of the motor in the running connection must match the phase conductor voltages of the network.

When the three phases are operating in a time sequence and are connected to the terminals of the motor in alphabetical order U1, V1 and W1, clockwise rotation is established as viewed from the motor shaft. The direction of rotation of the motor can be reversed if two connecting leads are interchanged.

Labeled terminals are provided to connect the protective conductor.
A PE terminal is provided in the connection box for grounding. A grounding terminal is provided on the outside of the motor frame – special version for 1LE1/1PC1 motors.
Order code **H04**.

If a brake control system or thermal protection is installed, the connections will also be in the connection box. The motors are suitable for direct connection to the line supply.

Design of the connection box

The number of terminals and the size of the connection box are designed for standard requirements.

For special requirements or upon the customer´s request, a larger connection box, can be delivered.
Order code **R50**

If the necessary installation angle of the motor would cause machine components to collide with the connection box, the connection box can be moved from the drive end (DE) to the non-drive end (NDE). Only use according to temperature class 155 (F) possible.
Order code **H08**
Not possible for explosion-proof motors.

Motor connection

Line feeder cables
The line feeder cables must be dimensioned acc. to DIN VDE 0298. The number of required feeder cables, if necessary in parallel, is defined by:

- The max. cable cross-section which can be connected
- The cable type
- Routing
- Ambient temperature and the corresponding admissible current in accordance with DIN VDE 0298

For motors with auxilliary terminals (e.g. 15th position of Order No. is letter **B**) an M16 x 1.5 cable gland with plug is additonally provided.
For further details, see the data sheet function in the SD generator.

The connection box is located on the housing and bolted in place. The connection box can be turned 4 x 90° on the terminal base of the machine's housing in the case of a terminal board with 6 terminal studs (standard design).
There are 2 entry holes at the standard position complete with sealing plugs and locknuts (see figure).

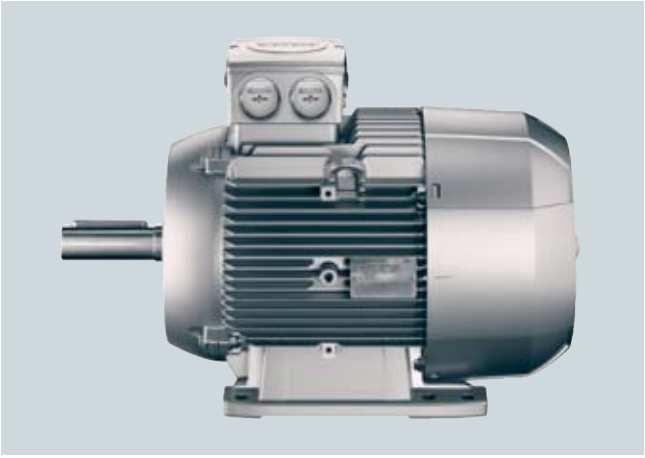

Connection box in standard position

Cable entry on connection box

Unless stated otherwise, the cable entry is located in the standard position as shown in the illustration.

The connection box can also be rotated such that the cable entry is located

- Towards the drive end (DE)
  (rotation of connection box by 90°, entry from DE)
  Order code **R10**
- Towards the non-drive end (NDE)
  (rotation of connection box by 90°, entry from NDE)
  Order code **R11**
- Opposite
  (rotation of connection box by 180°, entry from opposite end)
  Order code **R12**

The dimensions of the connection box are listed in part "Dimensions", see Pages 1/65 to 1/75 in accordance with the frame size and the "Dimension drawings".
If the position of the connection box (connection box RHS, LHS or above) is changed, the position of the cable entry must be checked and, if necessary, it can be ordered with the corresponding order codes (**R10**, **R11** and **R12**).

Ordering example:

Connection box on RHS (16th position of Order No. digit 5):
Without additional order code, cable entry from below.

With additional order code **R10**:
Cable entry from drive end (DE)

Connection box in standard position, detailed view

For cable entry to a standard connection box, a metal cable entry can be ordered for motor connection.
One cable gland, metal
Order code **R15**

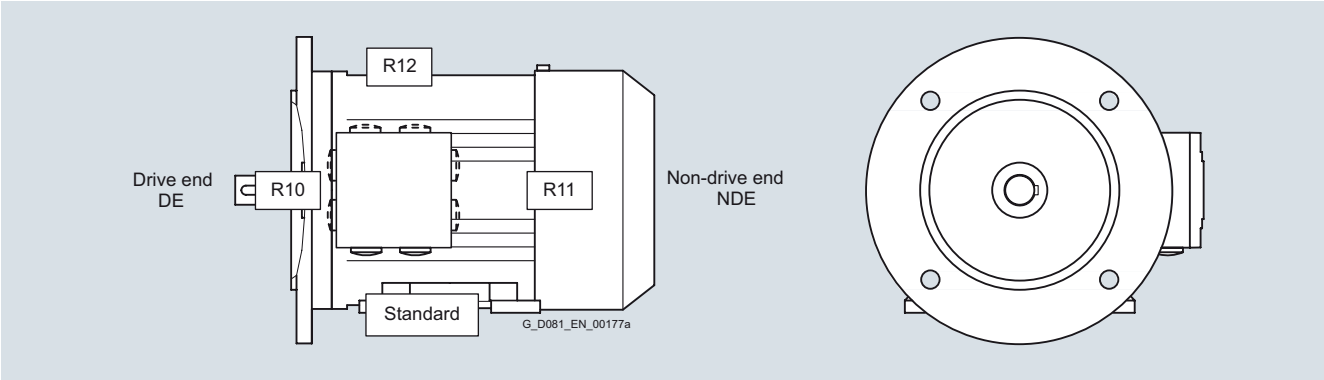

Locations of the cable entries with corresponding order codes

For special requirements for which standard holes for the cable entries are inadequate for the British market in UK, reduction pieces for M cable glands in accordance with British Standard that are mounted on both cable entries can be supplied.
Order code **R30**

Frame size	Cable entry acc. to	
	IEC	British Standard
100	2 x M32	2 x M20
112/132	2 x M32	2 x M25
160	2 x M40	2 x M32

Protruding cable ends

For confined spaces, protruding cable ends can be ordered, without a connection box with cover plate.

The following lengths of protruding cables can already be ordered using order codes on request:

- 3 cables protruding, 0.5 m long [1)]
  Order code **R20**
- 3 cables protruding, 1.5 m long [1)]
  Order code **R21**
- 6 cables protruding, 0.5 m long
  Order code **R22**
- 6 cables protruding, 1.5 m long
  Order code **R23**
- 6 cables protruding, 3.0 m long
  Order code **R24**

The cross-section of the named cables refers to a coolant temperature up to CT 40 °C.

[1)] With only 3 protruding cables additional plain text specifying star or delta connection is required.

Connection, circuit and connection box

Standard connection box TB1 F00, TB1 H00, TB1 J00

Larger connection box type TB1F10, TB1H10, TB1J10

Standard connection boxes/larger connection box for 1LE1/1PC1 motors – basic data

Motors	Frame size	Number of cable entries	Connection box material	Feeder connection
1LE1	100 … 160	2 entries complete with sealing plugs and locknuts Connection box is mounted and bolted in place.	Aluminum alloy	Without cable lug

Possible positions of the standard connection boxes/Larger connection box for 1LE1/1PC1 motors

Motors	Frame size	Connection box position			Rotation of connection box		
		Above	Side, right or left	Retrofitting possible	90°	180°	Retrofitting possible
1LE1	100 … 160	○	○	– [1]	○	○	Yes

○ Available version

Standard connection boxes/larger connection box for 1LE1/1PC1 motors in standard version

Frame size	Connection box	Number of terminals	Contact screw thread	Max. connectable cross-section	Outer cable diameter (sealing range)	Cable entry [2]	Two-part plate Adm. outer cable diameter
	standard / larger			mm^2	mm		mm
1LE1							
100	TB1 F00/TB1F10	6	M4	4	11 … 21	2 x M32 x 1.5	–
112							
132	TB1 H00/TB1H10	6	M4	6	11 … 21	2 x M32 x 1.5	–
160	TB1 J00/TB1J10	6	M5	16	19 … 28	2 x M40 x 1.5	–

– Not available

Terminal connection

The terminal board accommodates the terminals that are connected to the leads to the motor windings. The terminals are designed so that for frame sizes 100 ... 160 the external (line) connections can be made without the need for cable lugs.

1) Retrofittable screwed-on feet (16th position of Order No. digit **5, 6, 7** and **4** with order code **H01**).

2) Designed for cable glands with O-ring.

General technical data

Types of construction

Standard types of construction and special types of construction

Type of construction acc. to DIN EN 60034-7		Frame size	Letter 14th position of the Order No.	Order No. supplement **-Z** with order code
Without flange				
IM B3		100 L to 160 L	**A**	–
IM B6/IM 1051	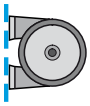	100 L to 160 L	**T**	–
IM B7/IM 1061	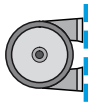	100 L to 160 L	**U**	–
IM B8/IM 1071	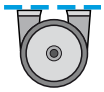	100 L to 160 L	**V**	–
IM V5/IM 1011 without protective cover		100 L to 160 L	**C**	–
IM V6/IM 1031	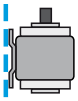	100 L to 160 L	**D**	–
IM V5/IM 1011 with protective cover		100 L to 160 L	**C**	**+ H00** [1]
With flange				
IM B5/IM 3001	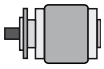	100 L to 160 L	**F**	–
IM V1/IM 3011 without protective cover	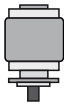	100 L to 160 L	**G**	–
IM V1/IM 3011 with protective cover	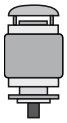	100 L to 160 L	**G**	**+ H00** [1]
IM V3/IM 3031		100 L to 160 L	**H**	–
IM B35/IM 2001	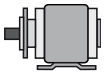	100 L to 160 L	**J**	–

In the DIN EN 50347 standard, flanges FF with through holes and flanges FT with tapped holes are specified.

[1] A second shaft extension **L05** is not possible.

Type of construction acc. to DIN EN 60034-7		Frame size	Letter 14th position of the Order No.	Order No. supplement **-Z** with order code
With standard flange				
IM B14/IM 3601		100 L to 160 L	**K**	**–**
IM V19/IM 3631	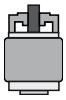	100 L to 160 L	**L**	**–**
IM V18/IM 3611 without protective cover	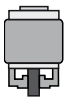	100 L to 160 L	**M**	**–**
IM V 18/IM 3611 with protective cover	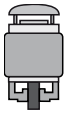	100 L to 160 L	**M**	**+ H00** [1]
IM B34/IM 2101		100 L to 160 L	**N**	**–**
With special flange (next larger standard flange)				
IM B14/IM 3601		100 L to 160 L	**K**	**+ P01**
IM V19/IM 3631		100 L to 160 L	**L**	**+ P01**
IM V18/IM 3611 without protective cover	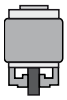	100 L to 160 L	**M**	**+ P01**
IM V 18/IM 3611 with protective cover	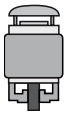	100 L to 160 L	**M**	**+ P01** **+ H00** [1]
IM B34/IM 2101		100 L to 160 L	**N**	**+ P01**

In DIN EN 50347, standard flanges are assigned to the frame sizes as FT with tapped holes. The special flange was assigned as a large flange in the previous DIN 42677.

The dimensions of the following types of construction are identical:
IM B3, IM B6, IM B7, IM B8, IM V5 and IM V6
IM B5, IM V1 and IM V3
IM B14, IM V18 and IM V19

Motors in the standard output range can be ordered in basic types of construction IM B3, IM B5 and IM B14 and can be operated in the following mounting positions – IM B6, IM B7, IM B8, IM V5, IM V6, IM V1, IM V3 (up to frame size 160 L) or IM V18 and IM V19. Eyebolts are available for transport and installation in a horizontal position. In conjunction with the eyebolts, for the purpose of stabilizing the position when the motor is arranged vertically, additional lifting straps (DIN EN 1492-1) and/or clamping bands (DIN EN 12195-2) must be used.

If mounting position IM V1 is ordered, eyebolts are supplied for vertical mounting.
The motors are designated in accordance with the types of construction on the rating plate.

With motors that have a vertical shaft extension, the end user must prevent an ingress of fluid along the shaft.
In the case of all types of construction with shaft extension down, the version “with protective cover” is urgently recommended, see the section “Degrees of protection”, Page 0/119.

Frame design

Motors in the types of construction with feet have, in some cases, two fixing holes at the feet at the non-drive end (NDE), see dimension tables, Pages 1/68 to 1/75. A code is cast into the motor close to the fixing retaining holes to identify the frame size.

A metal fan cover is used as standard for horizontal types of construction and types of constructions with shaft extension facing upwards (14th position of Order No. letter **A**, **T**, **U**, **V**, **D**, **F**, **H**, **J**, **K**, **L** or **N**) in combination with condensation drainage holes, order code **H03**.

[1] A second shaft extension **L05** is not possible.

General technical data

Mechanical design and degrees of protection

Preparation for gear mounting

The flange-mounting motors can be equipped with a radial seal in order to mount gearing.
Order code **H23**

It must be ensured that the sealing ring is lubricated using grease, oil mist or oil spray (it is not ermissible to use pressurized oil > 0.1 bar).
We recommend that the admissible bearing loads are carefully checked.

Eyebolts and transport

1LE1/1PC1 motors without feet have four cast eyebolts as standard, each offset by 90°; in the case of screwed-on feet, two eyebolts are covered by the feet, so in this case only two eyebolts are available for use.

Frame material			
Type series	Frame size	Frame material	Frame feet
1LE1/1PC1	100 … 160	Aluminum alloy	Cast [1)]

Preparation for mountings

The encoders of the “modular and special technology” can be fitted at a later time. The motor must be prepared for this. Possible for all 1LE1 motors (with the exception of 1LE1 with option F90 – version “Forced-air cooled motors without external fan and fan cover”).

For the brake with order code F01 and for all encoders from the “modular and special technology”, this preparation of the shaft extension on NDE can be ordered with the option “Prepared for mounting, only center hole”.
Order code **G40**
The length of the motor does not change because the shaft extension is still under the fan cover.

For the encoders

- 1XP8 012-10 order code G01
- 1XP8 012-20 order code G02

from the “modular technology”, this preparation of the shaft extension on NDE can be ordered with the option “Prepared for mounting with shaft D12”.
Order code **G41**
By using option **G41**, the motor length increases by dimension ΔI. For explanations of additional dimensions and weights, see “Technology”, “Dimensions and weights” from Page 0/137.

For the encoders

- LL 861 900 220 order code G04
- HOG 9 D 1024 I order code G05
- HOG 10 D 1024 I order code G06

from the “special technology”, this preparation of the shaft extension on NDE can be ordered with the option “Prepared for mounting with shaft D16”.
Order code **G42**
By using option **G42**, the motor length increases by dimension ΔI. For explanations of additional dimensions and weights, see “Technology”, “Dimensions and weights” from Page 0/137.

Motors that are prepared for additional mountings (order codes G40, G41, G42) are supplied without protective cover as standard.
If a protective cover is requested as cover or as mechanical protection for mounting provided by the customer, it can be ordered with order code **G43**. It must be mounted according to the supplied installation instructions. The protective cover has supports of different lengths that, depending on the height of the mounting, can be used during the installation.

The standard protective cover (order code **H00**) is not suitable for protecting additional mountings such as the rotary pulse encoder.

The order codes **G40**, **G41** and **G42** are not possible in combination with order code **L00**, vibration quantity level B.

1) Basic version, cast feet: Special version “Screwed-on feet (instead of cast)” with digit **5**, **6** and **7** in the 16th position of the Order No. or digit **4** with order code **H01**. Screwed-on feet are standard for motors with increased output.

Degrees of protection

All motors are designed to IP55 degree of protection. They can be installed in dusty or humid environments. The motors are suitable for operation in tropical climates. Guide value <60 % relative air humidity at CT 40 °C. Other requirements are available on request.

Brief explanation of the degree of protection

IP55: Protection against harmful dust deposits, protection against water jets from any direction.

IP56 (non-heavy-sea):
Protection against harmful dust deposits, protection against water jets from any direction.
Order code **H22**
DIN EN 60034-5 defines protection level 6 for water protection as: "Protection against water due to heavy seas or water in a powerful jet". IP56 non-heavy-sea degree of protection can only be used with the requirement "Protection against a powerful jet" and not for the requirement "Protection against heavy sea".
Not possible in combination with brake 2LM8 (order code **F01**).

IP65: Complete protection against dust deposits, protection against water jets from any direction.
Order code **H20**
In DIN EN 60034-5, the code 6 for protection against the ingress of foreign bodies and touch hazard protection for electrical machines is not listed – data for code 6 (protection against the ingress of dust) is given in EN 60529.
Not possible in combination with rotary pulse encoder HOG 9 D 1024I (order code **G05**) and/or brake 2LM8 (order code **F01**) and/or in combination with option "unpainted, only cast iron parts primed" (**S00**).

DIN EN 60529 contains a comprehensive description of this degree of protection as well as test conditions.

With motors that have a vertical shaft extension, the end user must prevent an ingress of fluid along the shaft.

For motors with shaft extension pointing downwards, the version "protective cover for types of construction", order code **H00**, is urgently recommended, see also "Types of construction", Page 0/116.

With flange-mounting motors, for IM V3 type of construction, collection of fluid in the flange basin can be prevented by drainage holes (on request).

The condensation drainage holes at the drive end (DE) and non-drive end (NDE) are sealed (IP55) on delivery. If the condensation drainage holes are ordered for motors fo the IM B6, IM B7 or IM B8 type of construction (feet located on side or top), the position of the drainage holes will be in the correct position for the type of construction.
Order code **H03**

A metal fan cover is used as standard for horizontal types of construction and types of constructions with shaft extension facing upwards (14th position of Order No. letter **A**, **T**, **U**, **V**, **D**, **F**, **H**, **J**, **K**, **L** or **N**) in combination with condensation drainage holes, order code **H03**, to facilitate mounting/demounting.

When the motors are used or stored outdoors we reccommend that they are kept under some sort of cover so that they are not subjected to direct intensive solar radiation, rain, snow, ice or dust over a long period of time. In such cases, technical consultation may be appropriate.

When the motors are used outdoors or in a corrosive environment, it is recommended that non-rusting screws are used externally.
Order code **H07**

Vibration-proof version
A load of 1.5 g in all 3 planes for up to 1 % of the service life of the motor is possible.
Order code **H02**

For availability of individual options for the relevant motor series, see section "Special versions" in catalog part 1.

Noise levels for mains-fed operation

The noise levels are measured in accordance with DIN EN ISO 1680 in a dead room. It is specified as the A-valued measuring-surface sound pressure level L_{pfA} in dB (A).
This is the spatial mean value of the sound pressure levels measured on the measuring surface. The measuring surface is a cube 1 m away from the surface of the motor. The sound power level is also specified as L_{WA} in dB (A).
The specified values are valid at 50 Hz at rated output (see the Selection and ordering data). The tolerance is +3 dB. At 60 Hz, the values are approximately 4 dB (A) higher. Please inquire about the noise levels for motors with converter-fed operation.

To reduce noise levels, 2-pole motors with frame size 132 S can be fitted with an axial-flow fan that is only suitable for one direction of rotation. The values can be taken from the table "Low-noise version" below.

Clockwise rotation
Order code **F77**

Counter-clockwise rotation
Order code **F78**

A second shaft extension and/or mountings (mounting of brake, external fan, or encoder) are not possible.

Low-noise version			
Type series	Frame size	2-pole motors	
		L_{pfA} dB (A)	L_{WA} dB (A)
1LE1 [1]	132	60	72
	160	60	72

[1] With the exception of 1LE1 with option F90 – version "Forced-air cooled motors without external fan and fan cover".

General technical data

Balance and vibration quantity

All of the rotors are dynamically balanced with an inserted half key. This corresponds to vibration quantity level A (normal/standard). The vibrational characteristics and behavior of electrical machinery is specified in DIN EN 60034-14 Sept. 2004. Based on DIN ISO 8821, the key convention "half key" (H) must be used for balancing.

The type of key convention used for balancing is stamped on the face of the DE/NDE.

F = Balancing with full key
(Full-key convention)
H = Balancing with half key
(Half-key convention) – standard
N = Balancing without key –
Plain text required (Convention without key)

This is indicated on the rating plate of motors up to frame size 112. Full-key balancing or balancing with full-key (F) is possible on request with order code **L02** (additional charge).

Balancing without featherkey (N) is possible on request by specifying code **L01** (additional charge).

Vibration quantity level A is the standard version and is valid for a rated frequency of 60 Hz.

Low-vibration version B can be supplied to fulfill stricter requirements on smooth running (additional charge).

Vibration quantity level B
Not possible with parallel roller bearings.
Order code **L00**

The order code **L00** vibration quantity level B is not possible in combination with order codes **G40**, **G41** and **G42**.

The limits stated in the table are applicable for uncoupled, idling motors in free suspension.

For converter-fed operation with frequencies greater than 60 Hz, special balancing is required for compliance with the specified limit values (plain text: max. supply frequency/speed).

For further details, see the online help in the SD configurator (available soon).

Limits (rms values) for max. vibration quantity of vibration distance (s), vibration speed (v) and acceleration (a) for the shaft height H

Vibration quantity level	Machine installation	Shaft height H in mm								
		56 ≤ H ≤ 132			132 < H ≤ 280			H > 280		
		s_{rms} µm	v_{rms} mm/s	a_{rms} mm/s²	s_{rms} µm	v_{rms} mm/s	a_{rms} mm/s²	s_{rms} µm	v_{rms} mm/s	a_{rms} mm/s²
A	Free suspension	25	1.6	2.5	35	2.2	3.5	45	2.8	4.4
	Rigid clamping	21	1.3	2.0	29	1.8	2.8	37	2.3	3.6
B	Free suspension	11	0.7	1.1	18	1.1	1.7	29	1.8	2.8
	Rigid clamping	–	–	–	14	0.9	1.4	24	1.5	2.4

For details, see standard DIN EN 60034-14, Sept. 2004.

Shaft and rotor

Shaft extension

60° center hole to DIN 332, Part 2 with M3 to M24 tapped hole depending on the shaft diameter (see dimension tables, Pages 1/68 to 1/75.)

Second standard shaft extension.
Order code **L05**

Possible for all 1LE1 motors (with the exception of 1LE1 with option F90 – version "Forced-air cooled motors without external fan and fan cover").

The second shaft extension can transmitt the full rated output via coupling output.

Please also inquire about the transmitted power and admissible cantilever force if belt pulleys, chains or gear pinions are used on the second shaft extension.

A second shaft extension is not available if a rotary pulse encoder and/or separately driven fan is mounted. Please inquire if a brake is mounted.

DE (shaft extension)	
Diameter	Thread
mm	mm
7 ... 10	DR M3
>10 ... 13	DR M4
>13 ... 16	DR M5
>16 ... 21	DR M6
>21 ... 24	DR M8
>24 ... 30	DR M10
>30 ... 38	DR M12
>38 ... 50	DS M16
>50 ... 85	DS M20
>85 ... 130	DS M24

Dimensions and tolerances for keyways and keys are designed to DIN EN 50347. The motors are always supplied with a key inserted in the shaft.

Admissible changes to the shaft extension:

Motor series	Frame size	Shaft extension length E in mm		Shaft extension diameter D in mm	
		Standard	Up to max.	Standard	Up to max. [1]
1LE1, 1PC1	100	60	120	28	30
	112				
	132	80	160	38	40
	160	110	220	42	45

Shaft extension with standard dimensions, without featherkey way

For motor series 1LE1 and 1PC1, the standard shaft extension can be ordered with standard dimensions without featherkey way.
Order code **L04**

Standard shaft made of non-rusting steel

For motor series 1LE1, a standard shaft made of non-rusting steel can be ordered. This is only possible for shaft extensions of standard dimensions. For non-standard shaft dimensions, there will be an additional charge!
Order code **L06**

Please inquire about other non-rusting materials.

Non-standard cylindrical shaft extension

The non-standard cylindrical shaft extension can be used on the drive end (DE) or non-drive end (NDE). The featherkey is always supplied with it.
Order code **Y55**

When motors are ordered which have a longer or shorter shaft extension as standard, the required position and length of the featherkey way must be specified in a sketch. It must be ensured that only featherkeys in accordance with DIN 6885, Form A are permitted to be used. The location of the featherkey way is in the center of the shaft extension. The length is defined by the manufacturer normatively.

Not valid for: Conical shafts, non-standard threaded journals, non-standard shaft tolerances, friction welded journals, extremely "thin" shafts, special geometry dimensions (e.g. square journals, etc.), hollow shafts.

For order code **Y55** and second standard shaft extension **L05** (see previous page):

- Dimensions D and DA must be less than or equal to the inner diameter of the roller bearing (see dimension tables under "Dimensions" in catalog part 1)
- Dimensions E and EA must be smaller than or equal to 2 x length E (standard) of the shaft extension

A non-standard cylindrical shaft extension can be supplied for the motor series listed in the table "Admissible changes to shaft extension" below up to the specified maximum lengths and diameters as compared to the standard shaft.

It is the responsibility of the customer to ensure that the admissible cantilever forces are reduced in accordance with the non-standard shaft extension.

Concentricity of shaft extension, coaxiality and linear movement in accordance with DIN 42955 Tolerance R for flange-mounting motors

The following are specified in DIN 42955 with Tolerance N (normal) and Tolerance R (reduced):

1. Concentricity tolerances for the shaft extension
2. Coaxiality tolerances for the shaft extension and flange centering
3. Linear movement tolerances for the shaft extension and flange surface

The concentricity of the shaft extension, coaxiality and linear movement according to DIN 42955 Tolerance R for flange-mounting motors can be ordered using order code **L08.**
This order code can be combined for motors with deep-groove bearings of series 60.., 62.. and 63… This cannot be supplied in combination with brake or encoder mounting.

Concentricity of the shaft extension can be ordered according to DIN 42955 Tolerance R for types of construction without flange with order code **L07**.

[1] At maximum admissible diameter, a step increase in shaft diameter is not possible.

Bearings and lubrication

Bearing lifetime (nominal lifetime)

The nominal bearing lifetime is defined acc. to standardized calculation procedures (DIN ISO 281) and is reached or even exceeded for 90 % of the bearings when the motors are operated in compliance with the data provided in the catalog.

Under average operating conditions, a lifetime (L_{h10}) of 100 000 hours can be achieved.

Generally, the bearing lifetime is defined by the bearing size, the bearing load, the operating conditions, the speed and the grease lifetime.

Bearing system

The bearing lifetime of motors with horizontal type of construction is at least 40 000 hours if there is no additional axial loading at the coupling output and at least 20 000 hours with the maximum admissible loads.

This assumes that the motor is operated at 50 Hz. The nominal bearing lifetime is reduced for converter-fed operation at higher frequencies.

For the admissible vibration values measured at the bearing plate, evaluation zones A and B specified in ISO 10816 are applicable in order to achieve the calculated lifetime under continuous duty. If higher vibration speeds will occur under the operating conditions, special arrangements will be necessary (please inquire).

In the basic bearing system, the floating bearing is situated at the drive end (DE) and the located bearing is situated at the non-drive end (NDE).

The bearing system is axially preloaded with a spring element at the drive end (DE) to ensure smooth running of the motor without play. (see Figure 1 of the Diagrams of bearings, Page 0/124).

For frame size 160 and above, the located bearing is axially secured at the non-drive end (NDE). Up to frame size 132, an additional axially-secured located bearing can be supplied on the non-drive end (NDE) complete with a retaining ring (see Figure 2 of the Diagrams of bearings, Page 0/124).
Order code **L21**

On request, the located bearing can also be supplied at the drive end (DE) (see Figure 3 of the Diagrams of bearings, Page 0/124).
Order code **L20**

For increased cantilever forces (e.g. belt drives), reinforced bearings can be used at the drive end (DE).
Order code **L22**

Motors 1LE1/1PC1 can be supplied with reinforced deep-groove bearings at both ends (size range 03).
Special bearings for DE and NDE, bearing size 63, the bearing plates are manufactured from cast-iron for this purpose.
Order code **L25**

A measuring nipple for SPM shock pulse measurement is mounted to check bearing vibration. The motors have a tapped hole for each bearing plate and a measuring nipple with a protective plug. If a second tapped hole is provided, it is fitted with a sealing plug.
Order code **Q01**

Bearing selection for increased cantilever forces (see the table "Bearing selection for 1LE1/1PC1 motors – Bearing for increased cantilever forces", Page 0/124) – "Admissible axial load" from Page 0/126.

Permanent lubrication

For permanent lubrication, the bearing grease lifetime is matched to the bearing lifetime. This can, however, only be achieved if the motor is operated in accordance with the catalog specifications.
In the basic version, the motors have permanent lubrication.

Regreasing

For motors which can be regreased at defined regreasing intervals, the bearing lifetime can be extended and/or unfavorable factors such as temperature, mounting conditions, speed, bearing size and mechanical load can be compensated.

It is possible to regrease motors, shaft heights 100 to 160. A lubricating nipple is optionally provided.
Order code **L23**

For motors with regreasing device, data concerning regreasing intervals, grease quantity, type of grease and, where applicable, additional data are stated on the rating plate or lubricating plate.
For regreasing intervals for basic versions see table "Grease lifetime and regreasing intervals for horizontal installation".
The regreasing device cannot be mounted in combination with mounting of the brake, order code F01.

Mechanical stress and grease lifetime

High speeds that exceed the rated speed with converter-fed operation and the resulting increased vibrations alter the mechanical running smoothness and the bearings are subjected to increased mechanical stress. This reduces the grease lifetime and the bearing lifetime (please inquire where applicable).

For converter-fed operation in particular, compliance with the mechanical limit speeds $n_{max.}$ at maximum supply frequency $f_{max.}$ is essential, see the following table "Mechanical limit speeds $n_{max.}$ at maximum supply frequency $f_{max.}$".

Mechanical limit speeds $n_{max.}$ at maximum supply frequency $f_{max.}$ (standard values)

Motor frame size	2-pole		4-pole		6-pole		8-pole	
	$n_{max.}$ rpm	$f_{max.}$ Hz	$n_{max.}$ rpm	$f_{max.}$ Hz	$n_{max.}$ rpm	$f_{max.}$ Hz	$n_{max.}$ rpm	$f_{max.}$ Hz
1LE1/1PC1								
100 L	6000	100	4200	140	3600	180	3000	200
112 M	6000	100	4200	140	3600	180	3000	200
132 S/M	5600	90	4200	140	3600	180	3000	200
160 M/L	4800	80	4200	140	3600	180	3000	200

Grease lifetime and regreasing intervals for **horizontal** installation

Permanent lubrication [1]			
Type series	Frame size	Number of poles	Grease lifetime up to CT 40 °C [2]
1LE1/1PC1	100 … 160	2 to 8	20000 h or 40000 h [3]
Regreasing (basic version) [1]			
Type series	Frame size	Number of poles	Regreasing interval up to CT 40 °C [2]
1LE1/1PC1	100 … 160	2 to 8	8000 h

1) For special uses and special greases, please inquire about grease lifetime and regreasing intervals.

2) If the coolant temperature is increased by 10 K, the grease lifetime and regreasing interval are halved.

3) 40000 h apply to horizontally installed motors with coupling output without additional axial loads.

General technical data

Bearing selection table for 1LE1/1PC1 motors – basic version

The bearing selection tables are only intended for planning purposes. Authoritative information on the actual type of bearings fitted in motors already supplied can be obtained by the factory by quoting the serial number or can be read from the rating plate.

When deep-groove ball bearings with side plates are used, the side plate is on the inside. Located bearing at drive end (DE) for 1LE1/1PC1 motors, see special version Figure 2 in the "Diagrams of bearings", below on this page.

For motors frame size	Number of poles	Drive end (DE) bearing		Non-drive end (NDE) bearing		Figure, below on this page
		Horizontal type of construction	Vertical type of construction	Horizontal type of construction	Vertical type of construction	
1LE1/1PC1						
100 L	2 to 8	6206 2ZC3	6206 2ZC3	6206 2ZC3	6206 2ZC3	**Fig. 1**
112 M	2 to 8	6206 2ZC3	6206 2ZC3	6206 2ZC3	6206 2ZC3	**Fig. 1**
132 S/M	2 to 8	6208 2ZC3 [1)]	6208 2ZC3 [1)]	6208 2ZC3 [1)]	6208 2ZC3 [1)]	**Fig. 1**
160 M/L	2 to 8	6209 2ZC3 [1)]	6209 2ZC3 [1)]	6209 2ZC3 [1)]	6209 2ZC3 [1)]	**Fig. 2**

Bearing selection table for 1LE1/1PC1 motors – Bearings for increased cantilever forces – Order code **L22**

Please inquire about noise and vibration data. The bearing selection tables are only intended for planning purposes. Authoritative information on the actual type of bearings fitted in motors already supplied can be obtained by the factory by quoting the serial number or can be read from the rating plate.
When deep-groove ball bearings with side plates are used, the side plate is on the inside.

For motors frame size	Number of poles	Drive end (DE) bearing		Non-drive end (NDE) bearing		Figure, below on this page
		Horizontal type of construction	Vertical type of construction	Horizontal type of construction	Vertical type of construction	
1LE1/1PC1						
100 L	2 to 8	6306 2ZC3 [1)]	6306 2ZC3 [1)]	6206 2ZC3 [1)]	6206 2ZC3 [1)]	**Fig. 1**
112 M	2 to 8	6306 2ZC3 [1)]	6306 2ZC3 [1)]	6206 2ZC3 [1)]	6206 2ZC3 [1)]	**Fig. 1**
132 S/M	2 to 8	6308 2ZC3 [1)]	6308 2ZC3 [1)]	6208 2ZC3 [1)]	6208 2ZC3 [1)]	**Fig. 1**
160 M/L	2 to 8	6309 2ZC3 [1)]	6309 2ZC3 [1)]	6209 2ZC3 [1)]	6209 2ZC3 [1)]	**Fig. 2**

Bearing selection table for 1LE1/1PC1 motors – Deep-groove bearings reinforced at both ends – Order code **L25**

Please inquire about noise and vibration data. The bearing selection tables are only intended for planning purposes. Authoritative information on the actual type of bearings fitted in motors already supplied can be obtained by the factory by quoting the serial number or can be read from the rating plate.
When deep-groove ball bearings with side plates are used, the side plate is on the inside.

For motors frame size	Number of poles	Drive end (DE) bearing		Non-drive end (NDE) bearing		Figure, below on this page
		Horizontal type of construction	Vertical type of construction	Horizontal type of construction	Vertical type of construction	
1LE1/1PC1						
100 L	2 to 8	6306 2ZC3 [1)]	6306 2ZC3 [1)]	6306 2ZC3 [1)]	6306 2ZC3 [1)]	**Fig. 1**
112 M	2 to 8	6306 2ZC3 [1)]	6306 2ZC3 [1)]	6306 2ZC3 [1)]	6306 2ZC3 [1)]	**Fig. 1**
132 S/M	2 to 8	6308 2ZC3 [1)]	6308 2ZC3 [1)]	6308 2ZC3 [1)]	6308 2ZC3 [1)]	**Fig. 1**
160 M/L	2 to 8	6309 2ZC3 [1)]	6309 2ZC3 [1)]	6309 2ZC3 [1)]	6309 2ZC3 [1)]	**Fig. 2**

Diagrams of bearings

Fig. 1: Drive-end bearing — Non-drive end bearing

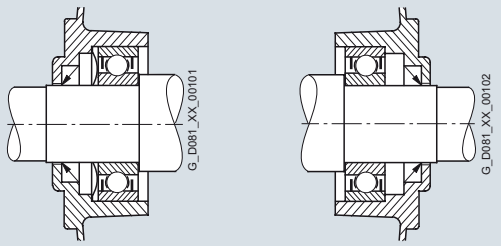

Fig. 2: Drive-end bearing — Non-drive end bearing
Located bearings for 1LE1 frame size 160

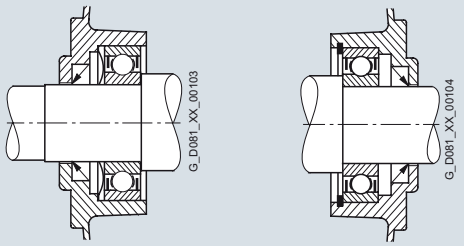

Fig. 3: Drive-end bearing — Non-drive end bearing

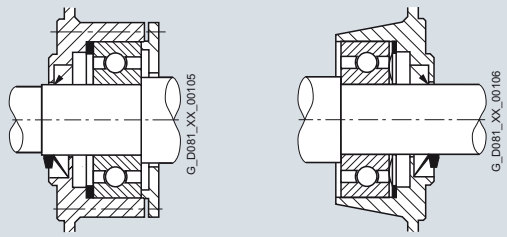

[1)] Bearings with a side plate are used for regreasable versions (order code **L23**).

Admissible cantilever forces

Admissible cantilever forces, basic version

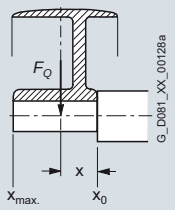

In order to calculate the admissible cantilever forces for a radial load, the line of force (i.e. the centerline of the pulley) of the cantilever force F_Q (N) must lie within the free shaft extension (dimension X).

Dimension x [mm] is the distance between the point of application of force F_Q and the shaft shoulder. Dimension $x_{max.}$ corresponds to the length of the shaft extension.

Total cantilever force $F_Q = c \cdot F_u$

The pre-tension factor c is a value gained from experience from the belt manufacturer. The following approximate value can be assumed:

For normal flat leather belts with an idler pulley c = 2;
for V-belts c = 2 to 2.5;
for special synthetic belts (depending on the type of load and type of belt) c = 2 to 2.5.

The circumferential force F_u (N) is calculated using the following equation

$$F_u = 2 \cdot 10^7 \frac{P}{n \cdot D}$$

F_u circumferential force in N
P rated motor output (transmitted power) in kW
n fan speed in rpm
D belt pulley diameter in mm

The pulleys are standardized acc. to DIN 2211, Sheet 3.

The admissible cantilever forces at 60 Hz are approx. 80 % of the 50 Hz values (please inquire).

It should be observed that for types of construction IM B6, IM B7, IM B8, IM V5 and IM V6 the belt tension is only permitted to act parallel to the mounting plane or towards the mounting plane and the feet must be supported. Both feet must be secured for foot-mounting types of construction.

Refer to “Bearing design for increased cantilever forces”, Page 0/126.

Admissible cantilever forces for the basic 50 Hz version
Valid are: x_0 values for x = 0 and $x_{max.}$ values für x = l (l = shaft extension)

For motors			Admissible cantilever force	
			at x_0	at $x_{max.}$
Frame size	Order No.	Number of poles	Type	Type
			N	N
1LE1 motor values for EFF1 motors with increased output [1] (Self-ventilated motors with increased output and high efficiency):				
100	**1LE1001-1AA**	2	1010	825
	1LE1001-1AB	4	1230	1010
	1LE1001-1AC	6	1440	1180
112	**1LE1001-1BA**	2	970	785
	1LE1001-1BB	4	1235	1000
	1LE1001-1BC	6	1440	1165
132	**1LE1001-1CA**	2	1470	1180
	1LE1001-1CB	4	1830	1470
	1LE1001-1CC	6	2150	1730
160	**1LE1001-1DA**	2	1550	1270
	1LE1001-1DB	4	1910	1550
	1LE1001-1DC	6	2230	1810

Admissible cantilever forces for the basic 50 Hz version
Valid are: x_0 values for x = 0 and $x_{max.}$ values für x = l (l = shaft extension)

For motors			Admissible cantilever force	
			at x_0	at $x_{max.}$
Frame size	Order No.	Number of poles	Type	Type
			N	N
1LE1 motors, standard values for EFF1 motors [1] (Self-ventilated energy-saving motors with high efficiency/ Forced-air cooled motors without external fan and fan cover with high efficiency) 1PC1 motors, standard values for EFF1 motors [1] (Self-cooled motors with high efficiency):				
100	**1LE1001-1AA 1PC1001-1AA**	2	1020	815
	1LE1001-1AB 1PC1001-1AB	4	1250	1000
	1LE1001-1AC 1PC1001-1AC	6	1450	1155
	1LE1001-1AD 1PC1001-1AD	8	1615	1290
112	**1LE1001-1BA 1PC1001-1BA**	2	1000	790
	1LE1001-1BB 1PC1001-1BB	4	1250	990
	1LE1001-1BC 1PC1001-1BC	6	1450	1150
	1LE1001-1BD 1PC1001-1BD	8	1610	1275
132	**1LE1001-1CA 1PC1001-1CA**	2	1505	1170
	1LE1001-1CB 1PC1001-1CB	4	1880	1460
	1LE1001-1CC 1PC1001-1CC	6	2170	1680
	1LE1001-1CD 1PC1001-1CD	8	2420	1880
160	**1LE1001-1DA 1PC1001-1DA**	2	1560	1240
	1LE1001-1DB 1PC1001-1DB	4	2040	1590
	1LE1001-1DC 1PC1001-1DC	6	2350	1820
	1LE1001-1DD 1PC1001-1DD	8	2610	2030

[1] The admissible cantilever force load of EFF2 motors can be increased by up to 5 %.

Bearing design for increased cantilever forces

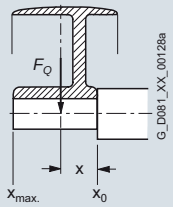

It should be observed that for types of construction IM B6, IM B7, IM B8, IM V5 and IM V6 the belt tension is only permitted to act parallel to the mounting plane or towards the mounting plane and the feet must be supported. Both feet must be secured for foot-mounted types of construction.

Admissible cantilever forces for the basic 50 Hz version
Deep-groove ball bearings at the drive end (DE) – Order code L22
Valid are: x_0 values for x = 0 and $x_{max.}$ values für x = l (l = shaft extension)

For motors			Admissible cantilever force	
			at x_0	at $x_{max.}$
Frame size	Order No.	Number of poles	Type	Type
			N	N
1LE1 motor values for EEF 1 motors with increased output [1] (Self-ventilated motors with increased output and high efficiency):				
100	**1LE1001-1AA**	2	1585	1300
	1LE1001-1AB	4	1960	1610
	1LE1001-1AC	6	2270	1865
112	**1LE1001-1BA**	2	1545	1250
	1LE1001-1BB	4	1960	1585
	1LE1001-1BC	6	2270	1835
132	**1LE1001-1CA**	2	2285	1840
	1LE1001-1CB	4	2860	2300
	1LE1001-1CC	6	3320	2670
160	**1LE1001-1DA**	2	2800	2240
	1LE1001-1DB	4	3450	2270
	1LE1001-1DC	6	4000	3200

Admissible cantilever forces for the basic 50 Hz version
Deep-groove ball bearings at the drive end (DE) – Order code L22
Valid are: x_0 values for x = 0 and $x_{max.}$ values für x = l (l = shaft extension)

For motors			Admissible cantilever force	
			at x_0	at $x_{max.}$
Frame size	Order No.	Number of poles	Type	Type
			N	N
1LE1 motors standard values for EFF1 motors [1] (Self-ventilated energy-saving motors with high efficiency/ Forced-air cooled motors without external fan and fan cover with high efficiency) 1PC1 motors, standard values for EFF1 motors [1] (Self-cooled motors with high efficiency):				
100	**1LE1001-1AA 1PC1001-1AA**	2	1590	1270
	1LE1001-1AB 1PC1001-1AB	4	1970	1575
	1LE1001-1AC 1PC1001-1AC	6	2270	1815
	1LE1001-1AD 1PC1001-1AD	8	2520	2015
112	**1LE1001-1BA 1PC1001-1BA**	2	1565	1240
	1LE1001-1BB 1PC1001-1BB	4	1965	1555
	1LE1001-1BC 1PC1001-1BC	6	2270	1800
	1LE1001-1BD 1PC1001-1BD	8	2510	1990
132	**1LE1001-1CA 1PC1001-1CA**	2	2310	1795
	1LE1001-1CB 1PC1001-1CB	4	2900	2250
	1LE1001-1CC 1PC1001-1CC	6	3330	2580
	1LE1001-1CD 1PC1001-1CD	8	3700	2870
160	**1LE1001-1DA 1PC1001-1DA**	2	2810	2170
	1LE1001-1DB 1PC1001-1DB	4	3540	2750
	1LE1001-1DC 1PC1001-1DC	6	4070	3160
	1LE1001-1DD 1PC1001-1DD	8	4510	3500

Admissible axial load

1LE1 motors in vertical type of construction – basic version (exept motors with increased output)

Frame size	**Shaft extension pointing**															
	3000 rpm				1500 rpm				1000 rpm				750 rpm			
	downwards		**upwards**		**downwards**		**upwards**		**downwards**		**upwards**		**downwards**		**upwards**	
	Load down	up	Load down	up	Load down	up	Load down	up	Load down	up	Load down	up	Load down	up	Load down	up
	N	N	N	N	N	N	N	N	N	N	N	N	N	N	N	N
100	140	700	550	280	130	990	820	285	130	1280	1110	285	130	1560	1390	285
112	140	710	550	300	130	1000	820	310	130	1290	1110	310	130	1570	1390	310
132	200	1200	950	470	180	1680	1200	470	180	1900	1600	470	190	2200	1900	440
160	1500	1400	950	1900	1900	1800	1300	2200	2200	2200	1600	2700	2700	2700	1950	2900

The values shown do not assume a cantilever force on the shaft extension.
The admissible loads are valid for operation at 50 Hz; for 60 Hz, please inquire.

The calculation of the admissible axial load was based on the drive with generally available coupling. For suppliers, see the relevant section of the catalog, section “Accessories”, Page 1/64.
Please inquire if the load direction alternates.

[1] The admissible cantilever force load of EFF2 motors can be increased by up to 5 %.

1LE1/1PC1 motors in horizontal type of construction – basic version (exept motors with increased output)

Frame size	3000 rpm				1500 rpm				1000 rpm				750 rpm			
	Tensile load	Thrust load (N) with radial load at		without radial load	Tensile load	Thrust load (N) with radial load at		without radial load	Tensile load	Thrust load (N) with radial load at		without radial load	Tensile load	Thrust load (N) with radial load at		without radial load
		x_0	$x_{max.}$			x_0	$x_{max.}$			x_0	$x_{max.}$			x_0	$x_{max.}$	
	N	N	N	N	N	N	N	N	N	N	N	N	N	N	N	N
100	220	450	350	630	220	600	500	910	220	650	550	1200	220	750	650	1480
112	220	450	350	630	220	600	500	910	220	650	550	1200	220	750	650	1480
132	350	650	520	1200	350	850	700	1600	350	1020	890	1900	350	1150	1020	2200
160	1500	850	720	1500	1500	1050	920	1800	1500	1250	1120	2200	1500	1350	1220	2600

The values shown do not assume a cantilever force on the shaft extension.
The admissible loads are valid for operation at 50 Hz; for 60 Hz, please inquire.

The calculation of the admissible axial load was based on the drive with generally available coupling. For suppliers, see the relevant section of the catalog “Accessories”, Page 1/64.
Please inquire if the load direction alternates.

Modular technology

Basic versions

The range of potential applications for the 1LE1 motors (with the exception of 1LE1 with option F90 – version “Forced-air cooled motors without external fan and fan cover” and 1PC1) can be broadened considerably by mounting the following modules (e.g. as brake motors).

- **1XP8 012** rotary pulse encoder
- Separately driven fan
- Brake

The brake must always be mounted in the factory for safety reasons. The rotary pulse encoder and/or the separately driven fan can also be retrofitted.

The degree of protection of the motors with modular technology is IP55. Higher degrees of protection on request.

When a rotary pulse encoder, brake or separately driven fan is mounted, the length of the motor increases by Δ l. For an explanation of the additional dimensions and weights, see “Technology”, “Dimensions and weights” from Page 0/137.

General technical data

1XP8 012 rotary pulse encoder

The rotary pulse encoder can be supplied already mounted in an HTL version as **1XP8 012-10** with order code **G01** or in a TTL version as **1XP8 012-20** with order code **G02**. The rotary pulse encoder can only be mounted on a standard non-drive end (NDE), i.e. a second shaft extension cannot be supplied.

The encoder can be retrofitted. The motor must be prepared for this. When the motor is ordered, the option “Prepared for mountings, center hole only”, order code **G40**, or the option “Prepared for mountings with shaft D12”, order code **G41**, must be specified (see “Mechanical design and degrees of protection”, Page 0/118).

The 1XP8 012 rotary pulse encoder is suitable for standard applications. For further encoders, see “Special technology”, Page 0/134.

When the rotary pulse encoder is mounted, the length of the motor increases by Δ l. For an explanation of the additional dimensions and weights, see “Technology”, “Dimensions and weights” from Page 0/137.

The rotary pulse encoders of “Modular technology” and “Special technology” are fitted as standard with a protective cover made of non-corrosive sheet steel.

Mounting of encoder at temperatures below –20 °C and higher than +40 °C on request.

Technical data of rotary pulse encoders		
Supply voltage U_B	**1XP8 012-10** (HTL version) +10 V to +30 V	**1XP8 012-20** (TTL version) 5V ±10 %
Current input without load	150 mA	120 mA
Admissible load current per output	max. 100 mA	max. 20 mA
Pulses per revolution	1024	1024
Outputs	2 square-wave pulses A, B – 2 inverted square-wave pulses A, B Zero pulse and inverted zero pulse	
Pulse offset between the two outputs	90°	90°
Output amplitude	$U_{High} = U_B - 2.5$ V $U_{Low} = 1.6$ V	$U_{High} > 2.5$ V $U_{Low} < 0.5$ V
Edge interval	≥ 0.43 µs	≥ 0.43 µs
Sampling rate	≤ 300 kHz	≤ 300 kHz
Maximum speed	6000 rpm	6000 rpm
Transportation/storage temperature range	–30 to +80 °C	–30 to +80 °C
Operating temperature range flange socket or fixed cable	–40 to +100 °C	–40 to +100 °C
Operating temperature range flexible cable	–10 to +100 °C	–10 to +100 °C
Degree of protection	IP66	IP66
Maximum admissible radial cantilever force	60 N	60 N
Maximum admissible axial force	40 N	40 N
Connection system	12-pin connector (mating connector is supplied)	
Certification	CSA, UL	CSA, UL
Weight	0.3 kg	0.3 kg

Separately driven fan

The use of a separately driven fan is recommended to increase motor utilization at low speeds and to limit noise generation at speeds significantly higher than the synchronous speed. Both of these results can only be achieved with converter-fed operation. Please inquire about traction and vibratory operation.

The separately driven fan can be supplied already fitted, order code **F70**.

It can also be ordered separately and retrofitted. For selection information and order numbers, see the section "Accessories" (available soon). A rating plate listing all the important data is fitted to the separately driven fan. Please note the direction of rotation of the separately driven fan (axial-flow fan) when connecting it. Admissible coolant temperatures $CT_{min.}$ –25 °C, $CT_{max.}$ +65 °C [1], lower/higher coolant temperatures on request. When the separately driven fan is mounted, the length of the motor increases by Δ l. For an explanation of the additional dimensions and weights, see "Technology", "Dimensions and weights" from Page 0/137.

Technical data of the separately driven fan (acc. to DIN EN 60034-1 Tolerance)

Frame size	Rated voltage range		Frequency	Rated speed	Power consumption	Rated current
	V		Hz	rpm	kW	A
100	1 AC	230 to 277	50	2790	0.075	0.29
	3 AC	220 to 290 Δ	50	2830	0.086	0.27
	3 AC	380 to 500 Y	50	2830	0.086	0.16
	1 AC	230 to 277	60	3280	0.094	0.28
	3 AC	220 to 332 Δ	60	3490	0.093	0.27
	3 AC	380 to 575 Y	60	3490	0.093	0.16
112	1 AC	230 to 277	50	2720	0.073	0.26
	3 AC	220 to 290 Δ	50	2770	0.085	0.27
	3 AC	380 to 500 Y	50	2770	0.085	0.15
	1 AC	230 to 277	60	3000	0.107	0.31
	3 AC	220 to 332 Δ	60	3280	0.094	0.28
	3 AC	380 to 575 Y	60	3280	0.094	0.16
132	1 AC	230 to 277	50	2860	0.115	0.40
	3 AC	220 to 290 Δ	50	2880	0.138	0.45
	3 AC	380 to 500 Y	50	2880	0.138	0.24
	1 AC	230 to 277	60	3380	0.185	0.59
	3 AC	220 to 332 Δ	60	3470	0.148	0.41
	3 AC	380 to 575 Y	60	3470	0.148	0.24
160	1 AC	230 to 277	50	2780	0.236	0.96
	3 AC	220 to 290 Δ	50	2840	0.220	0.76
	3 AC	380 to 500 Y	50	2830	0.220	0.43
	3 AC	220 to 332 Δ	60	3400	0.284	0.94
	3 AC	380 to 575 Y	60	3400	0.284	0.56

[1] The admissible coolant temperature for single phase versions (1 AC) for frame size 160 is $CT_{max.}$ +50 °C.

Brakes

Spring-operated disk brakes are used for the brakes with order code **F01**. When the brake is ordered, the supply voltage must be specified. The supply voltage for brakes is explained under "Modular technology – Additional versions", Page 0/133.

For the design of each brake type, the braking time, run-on revolutions, braking enery per braking procedure as well as the service life of the brake linings, see "Configuration of motors with brakes", Page 0/132.

When a brake is mounted, the length of the motor increases by Δ l. For an explanation of the additional dimensions and weights, see "Technology", "Dimensions and weights" from Page 0/137.

The brake can be retrofitted by authorized partners. The motor must be prepared for this. When the motor is ordered, the option "Prepared for mountings, center hole only", order code G40, must be specified (see "Mechanical design and degrees of protection", Page 0/118).

2LM8 spring-operated disk brake

The 2LM8 brake has IP55 degree of protection.

Please inquire if motors with brakes are to be operated below the freezing point or in very humid environments (e.g. close to the sea) with long standstill times. Please inquire if the brake motors are used for converter-fed operation with low speeds.

Design and mode of operation

The brake takes the form of a single-disk brake with two friction surfaces.

The braking torque is generated by friction when pressure is applied by one or more pressure springs in the de-energized state. The brake is released electromagnetically.

When the motor brakes, the rotor which can be axially shifted on the hub or the shaft is pressed via the armature disk against the friction surface by means of the springs. In the braked state, there is a gap S_{Gap} between the armature disk and the solenoid component. To release the brake, the solenoid is energized with DC voltage. The resulting magnetic force pulls the armature disk against the spring force on to the solenoid component. The spring force is then no longer applied to the rotor which can rotate freely.

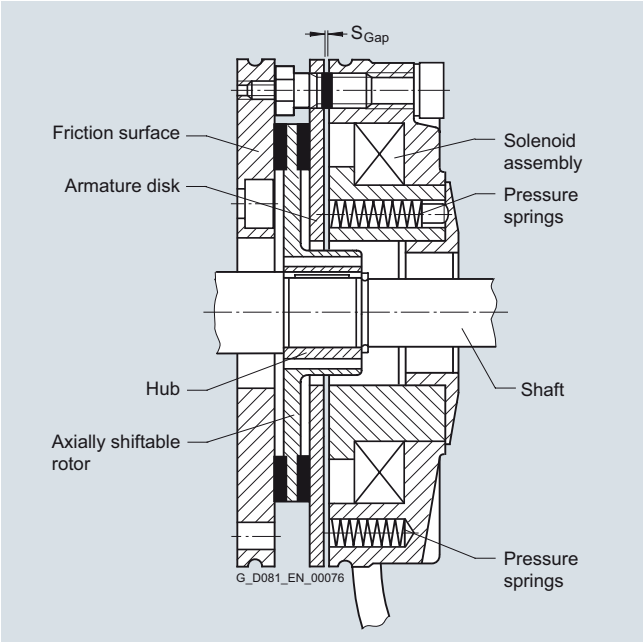

Design of the 2LM8 spring-operated disk brake

Rating plate

The following brake data are specified on the motor rating plate.

Brake type, supply voltage, frequency, current, temperature class, braking torque

Operating values for spring-operated brakes with standard excitation

For motor Frame size	Brake type	Rated braking torque at 100 rpm	Rated braking torque at 100 rpm in % at the following speeds: 1500 rpm	3000 rpm	Max. speed	Supply voltage	Current/power input [1]		Brake application time t_2 [2]	Brake release time	Brake moment of inertia	Noise level L_p with rated air gap	**Service capability of the brake**: Lifetime of brake lining L	Air gap adjustment required after braking energy L_N
		Nm	%	%	%	V	A	W	ms	ms	kgm²	dB (A)	Nm · 10⁶	Nm · 10⁶
100	**2LM8 040-5NA10**	40	81	74	66	AC 230	0.2	40	43	140	0.00036	80	1350	115
	2LM8 040-5NA60					AC 400	0.22							
	2LM8 040-5NA80					DC 24	1.67							
112	**2LM8 060-6NA10**	60	80	73	65	AC 230	0.25	53	60	210	0.00063	77	1600	215
	2LM8 060-6NA60					AC 400	0.28							
	2LM8 060-6NA80					DC 24	2.1							
132	**2LM8 100-7NA10**	100	79	72	65	AC 230	0.27	55	50	270	0.0015	77	2450	325
	2LM8 100-7NA60					AC 400	0.31							
	2LM8 100-7NA80					DC 24	2.3							
160	**2LM8 260-8NA10**	260	75	68	65	AC 230	0.5	100	165	340	0.0073	79	7300	935
	2LM8 260-8NA60					AC 400	0.47							
	2LM8 260-8NA80					DC 24	4.2							

[1] For 400 V AC and for 24 V DC, the power can deviate by up to +10 % as a result of the selected supply voltage.

[2] The specified switching times are valid for switching on the DC side with a rated release travel and with the coil already warm. They are average values which may vary depending on factors such as the rectifier type and the release travel. The brake application time for switching on the AC side, for example, is approximately 6 times longer than for switching on the DC side.

Lifetime of the brake lining

The braking energy L_N up to when the brake should be adjusted, depends on various factors. The main influencing factors include the masses to be braked, the operating speed, the switching frequency and therefore the temperature at the frictional surfaces. It is therefore not possible to specify a value for the friction energy until readjustment that is valid for all operating conditions.

When used as operating brake, the specific frictional surface wear (wear volume for the frictional work) is approximately 0.05 up to 2 cm^3/kWh.

Maximum admissible speeds

The maximum admissible speeds from which emergency stops can be made, are listed in the next table. These speeds should be considered as recommended values and must be checked under actual operating conditions.

The maximum admissible friction energy depends on the switching frequency and is shown for the individual brakes in the following diagram. Increased wear can be expected when the brakes are used for emergency stops.

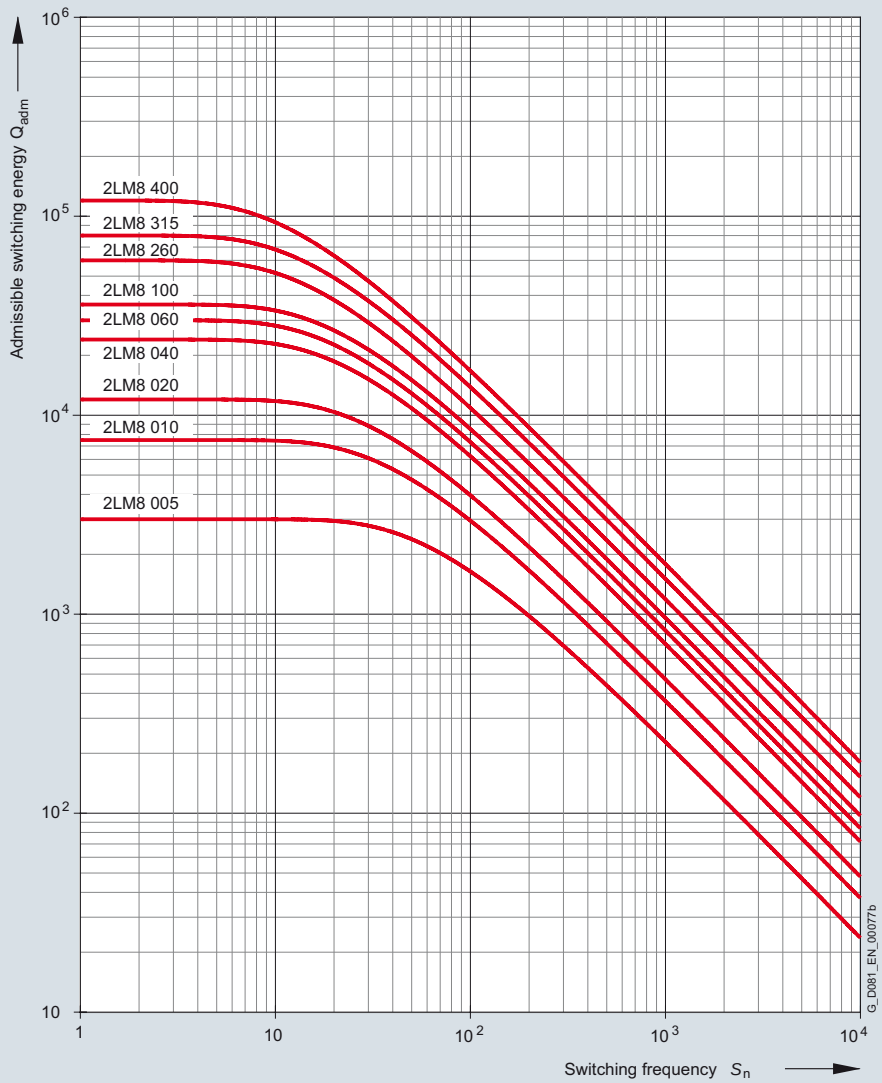

For motor Frame size	Brake type	Maximum admissible speeds: Max. adm. operating speed if max. adm. operating energy utilized	Max. adm. no-load speed with emergency stop function: Horizontal mounting	Vertical mounting	Changing the braking torque: Reduction per notch	Dimension "O1"	Min. braking torque	Readjusting the air gap: Rated air gap $S_{Gap\ Rated}$	Maximum air gap $S_{Gap\ max.}$	Min. rotor thickness $h_{min.}$
		rpm	rpm	rpm	Nm	mm	Nm	mm	mm	mm
100	**2LM8 040-5NA . .**	3000	6000	6000	1.29	12.5	21.3	0.3	0.65	8.0
112	**2LM8 060-6NA . .**	3000	6000	6000	1.66	11.0	32.8	0.3	0.75	7.5
132	**2LM8 100-7NA . .**	3000	5300	5000	1.55	13.0	61.1	0.3	0.75	8.0
160	**2LM8 260-8NA . .**	1500	4400	3200	5.6	17.0	157.5	0.4	1.2	12.0

Changing the braking torque

The brake is supplied with the braking torque already set. For 2LM8 brakes, the torque can be reduced to the dimension O_1 by unscrewing the adjusting ring with a hook spanner. The braking torque changes by the values shown in the above table for each notch of the adjusting ring.

Readjusting the air gap

Under normal operating conditions, the brake is practically maintenance-free. The air gap S_{Gap} must only be checked at regular intervals if the application requires an extremely large amount of frictional energy and readjusted to the rated gap $S_{Gap\ rated}$ at the latest when the maximum air gap $S_{Gap\ max.}$ is reached.

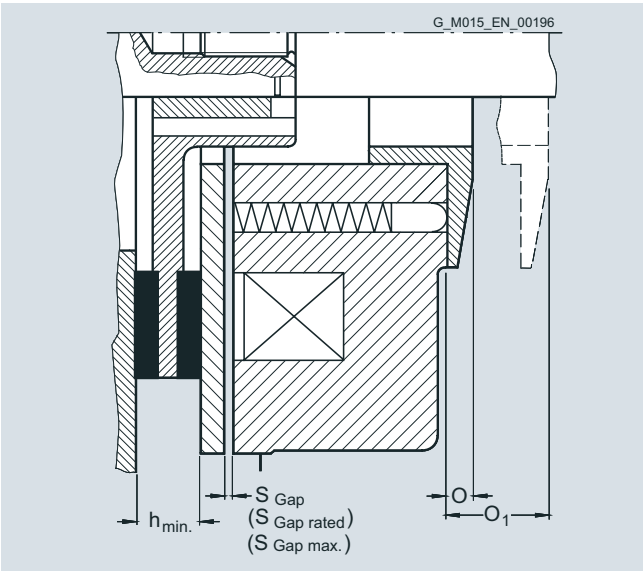

Configuration of motors with brakes

Braking time

The time it takes the motor to come to a standstill comprises two components:

a.) The application time of the brake t_2

b.) The braking time t_{Br}

$$t_{Br} = \frac{J \cdot n_{rated}}{9.55 \cdot (T_B \pm T_L)}$$

t_{Br} Braking time in s
J Total moment of inertia in kgm^2
n_{rated} Rated speed of the motor with brake in rpm
T_B Rated braking torque in Nm
T_L Average load torque in Nm
(if T_L supports braking, T_L is positive)

Braking energy per braking operation Q_{adm}

The braking energy per braking operation in Nm comprises the energy of the moments of inertia to be braked Q_{Kin} and the energy Q_L, which must be applied in order to brake against a load torque:

$$Q_{adm} = Q_{Kin} + Q_L$$

a.) The energy of the moments of inertia in Nm

$$Q_{Kin} = \frac{J \cdot n_{rated}^2}{182.4}$$

n_{rated} Rated speed before braking in rpm
J Total moment of inertia in kg m^2

b.) The braking energy in Nm against a load torque

$$Q_L = \frac{\pm T_L \cdot n_{rated} \cdot t_{Br}}{19.1}$$

T_L average load torque in Nm
T_L is positive if it acts against the brake
T_L is negative if it supports the brake

Run-on revolutions U

The number of run-on revolutions U of the motor with brake can be calculated as follows:

$$U = \frac{n_{rated}}{60}\left(t_2 + \frac{t_{Br}}{2}\right)$$

t_2 Brake application time in ms

Lifetime of the brake lining L and readjustment of the air gap

The brake lining wears due to friction which increases the air gap and the release time for the brake at standard excitation.

When the brake lining is worn out, it can be replaced easily.

In order to calculate the lifetime of the brake lining in terms of operations $S_{max.}$, the lifetime of the brake lining L in Nm must be divided by the braking energy Q_{adm}:

$$S_{max} = \frac{L}{Q_{adm}}$$

The interval between adjustments N in switching frequencies can be calculated in terms of operations by dividing the braking energy L_N which the brake can output until it is necessary to readjust the working air gap by Q_{adm}:

$$N = \frac{L_N}{Q_{adm}}$$

Additional versions

2LM8 spring-operated disk brake

Motor series

This brake is mounted on 1LE1 motors as standard (with the exception of 1LE1 with order code F90 – version "Forced-air cooled motors without external fan and fan cover", and 1PC1).

Voltage and frequency

The solenoid coil and the brake rectifier can be connected to the following voltages or can be supplied for the following voltages:

- Brake supply voltage: 24 V DC
  Order code **F10**
- Brake supply voltage: 230 V AC
  Order code **F11**
- Brake supply voltage: 400 V AC
  (directly at the terminal strip)
  Order code **F12**

When 60 Hz is used, the voltage for the brake must not be increased!

Order codes **F10** , **F11** and **F12** may only be used in conjunction with order code **F01**.

Connections

Labeled terminals are provided in the main connection box of the motor to connect the brake.

The AC voltage for the brake excitation winding is connected to the two free terminals of the rectifier block (~).

The brake can be released when the motor is at a standstill by separately exciting the solenoid. In this case, an AC voltage must be connected at the rectifier block terminals. The brake remains released as long as this voltage is present.

The rectifier is protected against overvoltages by varistors in the input and output circuits.

For 24 V DC brakes, the brake terminals are directly connected to the DC voltage source.

See the circuit diagrams below.

Fast brake application

If the brake is disconnected from the line supply, the brake is applied. The application time for the brake disk is delayed as a result of the inductance of the solenoid (shutdown on the AC side). This results in a considerable delay before the brake is mechanically applied. In order to achieve short brake application times, the circuit must be interrupted on the DC side. To realize this, the wire jumpers, located between contacts 1+ and 2+ at the rectifier are removed and replaced by the contacts of an external switch (see circuit diagrams below).

Manual brake release with lever

The brakes can be supplied with a mechanical manual release with lever.
Order code **F50**.

The dimensions of the brake lever depend on the motor frame size and can be read from the dimension drawing generator for motors in the SD configurator tool for low-voltage motors.

Bridge rectifier / half-wave rectifier

Brakes are connected through a standard bridge or half-wave rectifier or directly to the 2LM8 brake. See the circuit diagrams below.

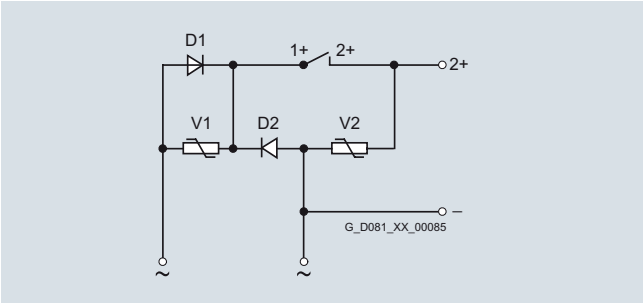

Half-wave rectifier, 400 V AC

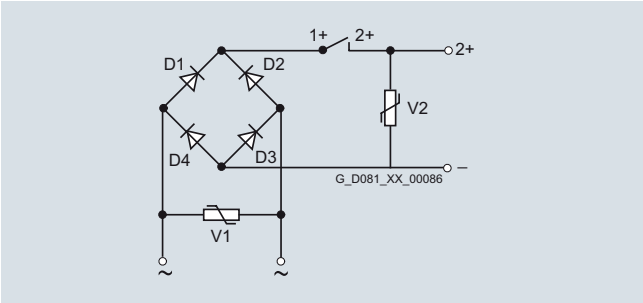

Bridge rectifier, 230 V AC

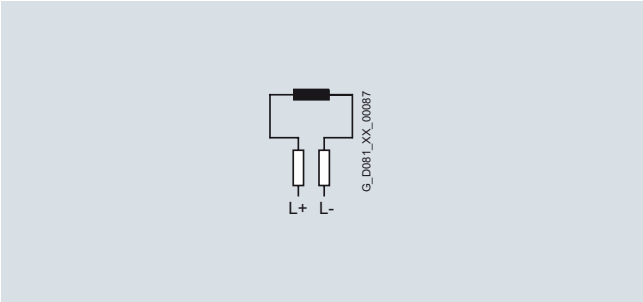

Brake connection for 24 V DC

General technical data

Special technology

The range of "Special technology" comprises rotary pulse encoders for the 1LE1 motors (with the exception of 1LE1 with order code F90 – version "Forced-air cooled motors without external fan and fan cover", and 1PC1).
The 1LE1 motors with the order codes **F70** (mounted separately driven fan), **F01** (mounted brake) and **F01 + F70** (mounted brake and separately driven fan) from the "Modular technology" range can be combined with the LL 861 900 200, HOG 9 D 1024 I and HOG 10 D 1024 I rotary pulse encoders from the "Special technology" range.
When a rotary pulse encoder is mounted, the length of the motor increases by Δ l. For an explanation of the additional dimensions and weights, see "Technology", "Dimensions and weights" from Page 0/137.

The rotary pulse encoders of "Modular technology" and "Special technology" are fitted as standard with a protective cover made of non-corrosive sheet steel.

Rotary pulse encoder LL 861 900 220

With its rugged construction, this rotary pulse encoder is also suitable for difficult operating environments. It is resistant to shock and vibration and has insulated bearings.

The LL 861 900 220 rotary pulse encoder can be supplied already mounted.
Order code **G04**.

*The LL 861 900 220 rotary pulse encoder can be retrofitted. The motor must be prepared for this. When the motor is ordered, the option "Prepared for mountings, center hole only", order code **G40**, or the option "Prepared for mountings with shaft D16", order code **G42**, must be specified (see "Mechanical design and degrees of protection", Page 0/118). The rotary pulse encoder is not part of the scope of supply in this case.*

The version of the rotary pulse encoder with a diagnostics system (ADS) can be supplied by Leine and Linde.

Manufacturer:
Leine and Linde (Deutschland) GmbH
Bahnhofstraße 36
73430 Aalen
Tel. +49 (0) 73 61-78093-0
Fax +49 (0) 73 61-78093-11

http://www.leinelinde.com
e-mail: info@leinelinde.se

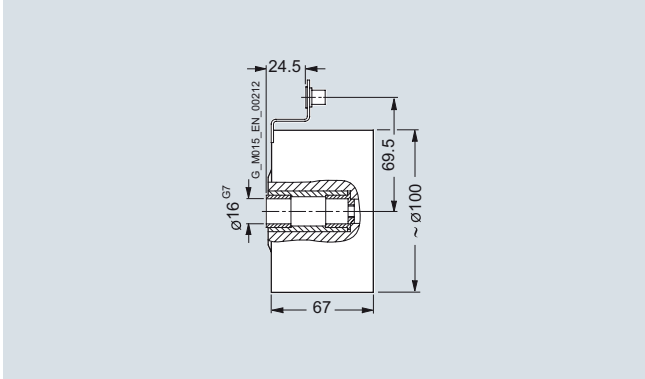

Mounting dimensions of rotary pulse encoder LL 861 900 220

Technical data for LL 861 900 220 (HTL version)

Mounting of encoder at temperatures below –20 °C and higher than +40 °C on request.

Supply voltage U_B	**+9 V to +30 V**
Current input without load	max. 80 mA
Admissible load current per output	40 mA
Pulses per revolution	1024
Outputs	6 short-circuit proof square-wave pulses A, A', B, B', 0, 0'
Pulse offset between the two outputs	90° ±25° el.
Output amplitude	U_{High} >20 V U_{Low} <2.5 V
Mark space ratio	1:1 ±10 %
Edge steepness	50 V/µs (without load)
Maximum frequency	100 kHz for 350 m cable
Maximum speed	4000 rpm
Temperature range	–20 to +80 °C
Degree of protection	IP65
Maximum adm. radial cantilever force	300 N
Maximum adm. axial force	100 N
Connection system	Terminal strips in encoder Cable connection M20 x 1.5 radial
Weight	Approx. 1.3 kg

HOG 9 D 1024 rotary pulse encoder

The encoder is fitted with insulated bearings.

The HOG 9 D 1024 I rotary pulse encoder can be supplied already mounted.
Order code **G05**.

*The HOG 9 D 1024 I rotary pulse encoder can be retrofitted. The motor must be prepared for this. When the motor is ordered, the option "Prepared for mountings, center hole only", order code **G40**, or the option "Prepared for mountings with shaft D16", order code **G42**, must be specified (see "Mechanical design and degrees of protection", Page 0/118). The rotary pulse encoder is not part of the scope of supply in this case.*

Manufacturer:
Baumer Hübner GmbH
Planufer 92b
10967 Berlin
Tel. +49 (0) 30-6 90 03-0
Fax +49 (0) 30-6 90 03-1 04

http://www.baumerhuebner.com
e-mail: info@baumerhuebner.com

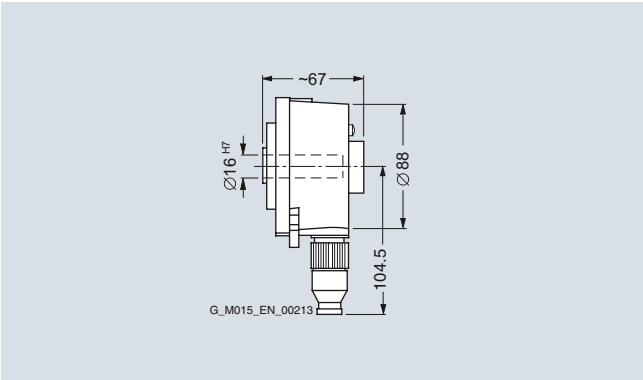

Mounting dimensions for HOG 9 D 1024 I rotary pulse encoder

Technical data for HOG 9 D 1024 (TTL version)

Mounting of encoder at temperatures below –20 °C and higher than +40 °C on request.

Supply voltage U_B	**+9 V to +30 V**
Current input without load	50 mA to 100 mA
Admissible load current per output	60 mA, 300 mA peak
Pulses per revolution	1024
Outputs	4 short-circuit proof square-wave pulses A, B and A', B'
Pulse offset between the two outputs	90° ±20 %
Output amplitude	$U_{High} \geq U_B - 3.5$ V $U_{Low} \leq 1.5$ V
Mark space ratio	1:1 ±20 %
Edge steepness	10 V/µs
Maximum frequency	120 kHz
Maximum speed	7000 rpm
Temperature range	–20 to +100 °C
Degree of protection	IP56
Maximum adm. radial cantilever force	150 N
Maximum adm. axial force	100 N
Connection system	Radial right-angle plug (mating connector is part of the scope of supply)
Mech. design acc. to Hübner Ident. No.	73 522 B
Weight	Approx. 0.9 kg

General technical data

HOG 10 D 1024 I rotary pulse encoder

This encoder is extremely rugged and is therefore suitable for difficult operating conditions. It is fitted with insulated bearings.

The HOG 10 D 1024 I rotary pulse encoder can be supplied already mounted.
Order code **G06**.

*The HOG 10 D 1024 I rotary pulse encoder can be retrofitted. The motor must be prepared for this. When the motor is ordered, the option "Prepared for mountings, center hole only", order code **G40**, or the option "Prepared for mountings with shaft D16", order code **G42**, must be specified (see "Mechanical design and degrees of protection", Page 0/118). The rotary pulse encoder is not part of the scope of supply in this case.*

Manufacturer:
Baumer Hübner GmbH
Planufer 92b
10967 Berlin
Tel. +49 (0) 30-6 90 03-0
Fax +49 (0) 30-6 90 03-1 04

http://www.baumerhuebner.com
e-mail: info@baumerhuebner.com

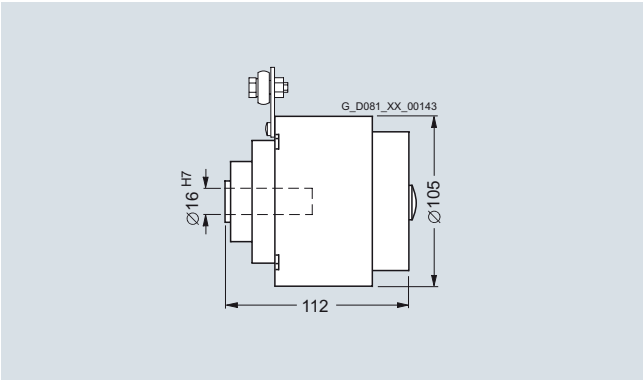

Mounting dimensions for HOG 10 D 1024 I rotary pulse encoder

Technical data for HOG 10 D 1024 (HTL version)

Mounting of encoder at temperatures below –20 °C and higher than +40 °C on request.

Supply voltage U_B	**+9 V to +30 V**
Current input without load	Approx. 100 mA
Admissible load current per output	60 mA, 300 mA peak
Pulses per revolution	1024
Outputs	4 short-circuit proof square-wave pulses A, B and A', B'
Pulse offset between the two outputs	90° ±20 %
Output amplitude	$U_{High} \geq U_B - 3.5$ V $U_{Low} \leq 1.5$ V
Mark space ratio	1:1 ±20 %
Edge steepness	10 V/µs
Maximum frequency	120 kHz
Maximum speed	7000 rpm
Temperature range	–20 to +100 °C
Degree of protection	IP66
Maximum adm. radial cantilever force	150 N
Maximum adm. axial force	80 N
Connection system	Terminals, cable connection M20 x 1.5
Mech. design acc. to Hübner Ident. No.	74 055 B
Weight	Approx. 1.6 kg

Dimensions and weight

Fig. 1 Brake
Order code **F01**
[optionally with manual release, order code **F50**]

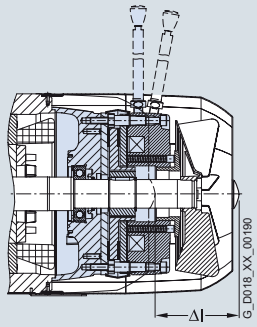

Fig. 2 Standard protective cover for types of construction
Order code **H00**

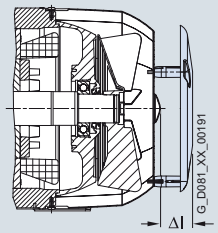

Fig. 3 Rotary pulse encoder (on cover)
Order code **G01/G02/G04/G05/G06**
[protective cover as standard]

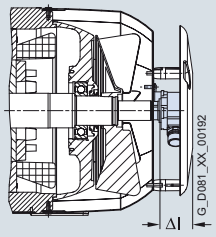

Fig. 4 Brake and rotary pulse encoder (on cover)
Order code **F01**
+ G01/G02/G04/G05/G06
[optionally with manual release, order code **F50**;
protective cover as standard]

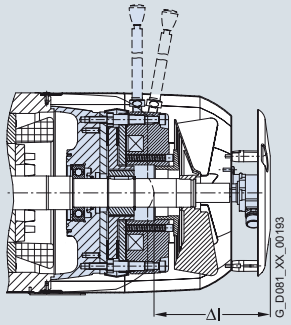

Fig. 5 Separately driven fan
Order code **F70**

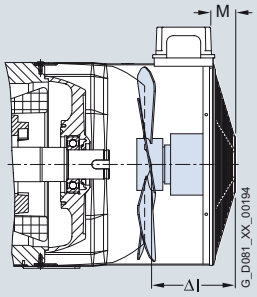

Fig. 6 Brake and separately driven fan
Order code **F01 + F70**
[optionally with manual release, order code **F50**]

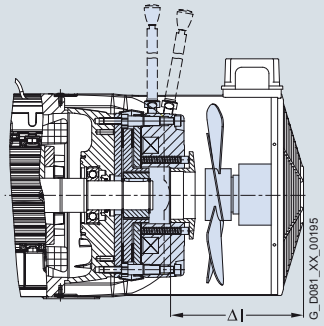

Dimensions ΔI and weights, see from Page 0/139.

General technical data

Fig. 7 Rotary pulse encoder (under the cover) and separately driven fan
Order code **F70**
+ G01/G02/G04/G05/G06

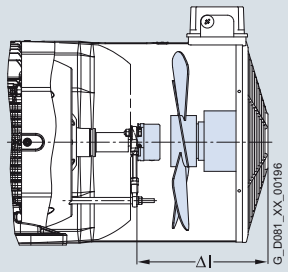

Fig. 8 Brake, rotary pulse encoder (under the cover) and separately driven fan
Order code **F01 + F70**
+ G01/G02/G04/G05/G06
[optionally with manual release, order code **F50**]

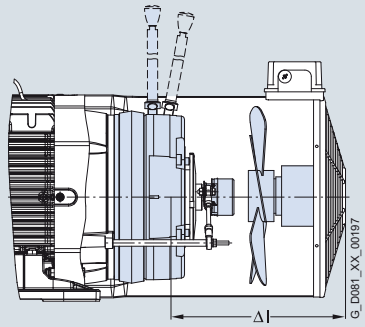

Fig. 9 Protective cover for separately driven fan
Order code **H00**

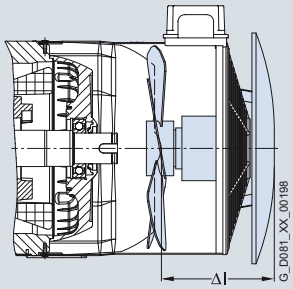

Fig. 10 Prepared for mountings – only center hole
(for brake order code **F01** and/or rotary pulse encoder order codes **G01**/**G02**/**G04**/**G05**/**G06**)
Order code **G40**

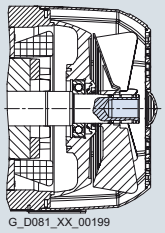

Fig. 11 Prepared for mountings with shaft D12/D16
Order codes **G41**/**G42**

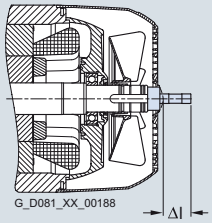

Dimensions ΔI and weights, see from Page 0/139.

Frame size	Assignment											
	Fig. 1		**Fig. 2**		**Fig. 3**							
	Brake		Protective cover		Rotary pulse encoder including protective cover							
					1XP8 012		**LL 861 900 220**		**HOG9 D 1024 I**		**HOG10 D 1024 I**	
	Order code **F01**		Order code **H00**		Order codes **G01, G02**		Order code **G04**		Order code **G05**		Order code **G06**	
	Δl	Weight approx.	Δl	Weight approx.	Δl	Weight approx.	Δl	Weight approx.	Δl	Weight approx.	Δl	Weight approx.
	mm	kg	mm	kg	mm	kg	mm	kg	mm	kg	mm	kg
1LE1												
100	81	5.9	33	0.4	49	0.9	76	1.9	76	1.5	119	2.2
112	88	7.8	33	0.4	49	0.8	76	1.9	76	1.5	119	2.2
132	114	11.9	51.5	0.7	51.5	1.3	78.5	2.4	78.5	2	121.5	2.7
160	130	30.7	50	0.7	50	1.5	77	2.7	77	2.3	120	3

Frame size	Assignment										
	Fig. 4								**Fig. 5**		
	Brake and rotary pulse encoder (on cover)								Separately driven fan		
	1XP8 012		**LL 861 900 220**		**HOG9 D 1024 I**		**HOG10 D 1024 I**				
	Order codes **F01 + G01/G02**		Order codes **F01 + G04**		Order codes **F01 + G05**		Order codes **F01 + G06**		Order code **F70**		
	Δl	Weight approx.	Δl	Weight approx.	Δl	Weight approx.	Δl	Weight approx.	Δl	M	Weight approx.
	mm	kg	mm	kg	mm	kg	mm	kg	mm	mm	kg
1LE1											
100	130	6.8	157	7.8	157	7.4	200	8.1	86.5	30	2.4
112	137	8.6	164	9.7	164	9.3	207	10	81.5	30	2.6
132	165.5	13.2	192.5	14.3	192.5	13.9	235.5	14.6	116	40	3.8
160	180	32.2	207	33.4	207	33	250	33.7	135.5	40	6.5

Frame size	Assignment									
	Fig. 6		**Fig. 7**							
	Brake and separately driven fan		Separately driven fan and rotary pulse encoder (under cover)							
	Order codes **F01 + F70**		Order codes **F70 + G01/G02**		Order codes **F70 + G04**		Order codes **F70 + G05**		Order codes **F70 + G06**	
	Δl	Weight approx.	Δl	Weight approx.	Δl	Weight approx.	Δl	Weight approx.	Δl	Weight approx.
	mm	kg	mm	kg	mm	kg	mm	kg	mm	kg
1LE1										
100	161.5	8.3	161.5	3.3	161.5	4.3	161.5	3.9	196.5	4.6
112	156.5	10.4	156.5	3.4	156.5	4.5	156.5	4.1	191.5	4.8
132	186	15.7	186	5.1	186	6.2	186	5.8	241	6.5
160	205.5	37.2	205.5	8	205.5	9.2	205.5	8.8	270.5	9.5

Frame size	Assignment										
	Fig. 8								**Fig. 9**		
	Brake, separately driven fan and rotary pulse encoder (under cover)								Protective cover for separately driven fan		
	Order codes **F01 + F70 + G01/G02**		Order codes **F01 + F70 + G04**		Order codes **F01 + F70 + G05**		Order codes **F01 + F70 + G06**		Order code **H00**		
	Δl	Weight approx.	Δl	Weight approx.	Δl	Weight approx.	Δl	Weight approx.	Δl	Weight approx.	Diameter of the fan cover
	mm	kg	mm	kg	mm	kg	mm	kg	mm	kg	mm
1LE1											
100	196.5	9.2	196.5	10.2	196.5	9.8	246.5	10.5	30	1.4	210
112	191.5	11.2	191.5	12.3	191.5	11.9	241.5	12.6	33	1.8	249
132	241	17	241	18.1	241	17.7	291	18.4	24	2.4	300
160	270.5	38.7	270.5	39.9	270.5	39.5	320.5	40.2	31	3	338

General technical data

Frame size	Assignment					
	Fig. 10		**Fig. 11**			
	Prepared for mountings – only center hole (for Brake order code **F01** and/or rotary pulse encoder order codes **G01**/**G02**/**G04**/**G05**/**G06**) Order code **G40**		Prepared for mountings with shaft D12/D16 Order codes **G41**/**G42**			
	Order code **G40**		Order code **G41**		Order code **G42**	
	Δl	Weight approx.	Δl	Weight approx.	Δl	Weight approx.
	mm	kg	mm	kg	mm	kg
1LE1						
100	0	0	11.3	0.15	47.3	0.2
112	0	0	7.5	0.15	47.3	0.2
132	0	0.1	10.3	0.3	50.3	0.4
160	0	0.2	5.6	0.4	45.6	0.7

New Generation 1LE1/1PC1

1/2 Orientation
1/2 Overview
1/3 Benefits
1/4 Application
1/4 Technical specifications
1/5 Selection and ordering data
1/7 More information

1/8 General Line motors with shorter delivery time
1/8 Selection and ordering data

1/18 Self-ventilated energy-saving motors with improved efficiency
1/18 Selection and ordering data

1/22 Self-ventilated energy-saving motors with high efficiency
1/22 Selection and ordering data

1/30 Self-ventilated motors with increased output and improved efficiency
1/30 Selection and ordering data

1/34 Self-ventilated motors with increased output and high efficiency
1/34 Selection and ordering data

1/38 Forced-air cooled motors without external fan and fan cover with improved efficiency
1/38 Selection and ordering data

1/42 Forced-air cooled motors without external fan and fan cover with high efficiency
1/42 Selection and ordering data

1/46 Self-cooled motors without external fan and fan cover with improved efficiency
1/46 Selection and ordering data

1/50 Self-cooled motors without external fan and fan cover with high efficiency
1/50 Selection and ordering data

1/54 Special versions
1/54 Selection and ordering data
1/54 • Voltages
1/55 • Options

1/64 Accessories
1/64 Overview
1/64 More information

1/65 Dimensions
1/65 Overview
1/67 More information
1/68 Dimensional drawings

Overview

Increasing energy costs have resulted in greater emphasis on the power consumption of drive systems. It is extremely important to utilize the full potential for minimization here to secure competitiveness today and in the future. The environment will also profit from reduced energy consumption.

With this in mind, we have already developed a new generation of low-voltage motors that you can use in drives to move even more than before. Innovative copper rotors that we develop and manufacture entirely in-house create the perfect conditions for motors with a high degree of efficiency (EFF2 and EFF1 motors are located in the same housing). The new motors for EFF1 (High Efficiency) offer considerable energy savings and protect our environment.

The modular mounting concept also provides total flexibility: Each motor is based on a uniform concept for all markets worldwide. Our motors are manufactured in accordance with modern ecological principles and give machines and plants more drive. Worldwide and for every application. Efficiency over the complete life cycle is a clear benefit of our motors especially for the use of 1LE1/1PC1 designed to EFF1. All machine manufacturers and plant operators can profit from this – not to mention the environment. We will be launching our new 1LE1/1PC1 motors onto the market step by step.

Classified energy-saving motors for an efficient energy balance

Depending on requirements, energy-saving motors are available for an efficient energy balance for the EU in accordance with CEMEP (European Committee of Manufacturers of Electrical Machines and Power Electronics) as well as for the North American market in accordance with EPACT (US Energy Policy Act).

Efficiency requirements according to CEMEP

CEMEP classifies efficiency levels for 2-pole and 4-pole motors with outputs of 1.1 to 90 kW. Three efficiency classes are defined:

- **EFF1** (High Efficiency motors – referred to below as “Motors with high efficiency”)
- **EFF2** (Improved Efficiency motors – referred to below as “Motors with improved efficiency”)
- **EFF3** (Conventional Efficiency motors)

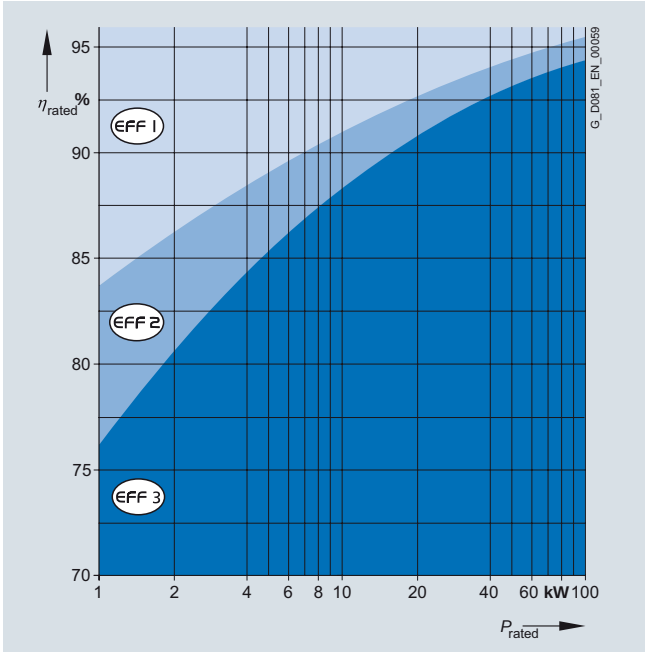

At a glance: EU/CEMEP for Europe

- Status
  Voluntary compliance with efficiency classification
- Covers
  2-pole, 4-pole 50 Hz squirrel-cage motors from 1.1 to 90 kW (at 400 V and 50 Hz)
- Required marking
  Efficiency class on the motor rating plate
  η_{rated}, $\eta_{3/4}$ load and efficiency class in the documentation

Efficiency requirements according to EPACT

In 1997, an act was passed in the US to define minimum efficiencies for low-voltage three-phase motors (EPACT).

An act is in force in Canada that is largely identical, although it is based on different verification methods. The efficiency is verified for these motors for the USA using IEEE 112, Test Method B and for Canada using CSA-C390. Apart from a few exceptions, all three-phase low-voltage motors imported into the USA or Canada must comply with the legal efficiency requirements. The law demands minimum efficiency levels for motors with a voltage of 230 and 460 V at 60 Hz, in the output range of 1 to 200 HP (0.75 to 150 kW) with 2, 4 and 6 poles. Explosion-proof motors must also be included.

The EPACT efficiency requirements exclude, for example:

- Motors whose frame size-output classification does not correspond with the standard series according to NEMA MG1-12.
- Flange-mounting motors
- Brake motors
- Converter-fed motors
- Motors with design letter C and higher

Overview (continued)

EPACT lays down that the nominal efficiency at full load and a "CC" number (Compliance Certification) must be included on the rating plate. The "CC" number is issued by the US Department of Energy (DOE). The following information is stamped on the rating plate of EPACT motors which must be marked by law:

- Nominal efficiency
- Design letter
- Code letter
- CONT
- CC No. CC 032A (Siemens) and NEMA MG1-12.

At a glance: EPACT/CSA for North America

- Status
  Minimum efficiencies required by law
- Covers
  2-, 4- and 6-pole 60 Hz squirrel-cage motors from 1 to 200 HP (0.75 to 150 kW) for 230 V and/or 460 V 60 Hz
- Required marking
  Efficiency η_{rated} on the motor rating plate

Motors with increased output and compact construction (1LE1)

Motors with increased output and compact construction can be used to advantage in confined spaces. For a slightly longer overall length, the output is at least as high as that of the next larger shaft height. These compact motors are also optimized for efficiency. They are available in EFF1 and EFF2 and therefore reduce the operating costs.

Motors without fan cover and external fan (1LE1 with order code F90)

Forced-air cooled motors with surface cooling without fan cover and external fan are mainly used for driving fans.

Standard motors with reduced output without fan cover and external fan (1PC1)

Self-cooled motors with surface cooling without fan cover and external fan are suitable for the following operating conditions:

- Types of duty with adequate cooling times (e.g. temporary duty for positioning drives)
- Environmental conditions that demand compact installation space (e.g. in motors with a stopping function)

Conditions under which an external fan has an adverse effect (e.g. simple cleaning in the food industry, textile industry)

Motors delivered ex-stock with shorter delivery time – General Line 1LE1

The most popular basic versions of the 1LE1 motor series can be supplied ex-stock and are termed the "General Line".

A so-called "Sector version" will be available soon for some of the motors available from stock. These include a located bearing at the drive end (DE), PTC thermistor and screwed-on feet for the IM B35 type of construction.

The normal delivery time for General Line motors is 1 to 2 days from the time of clarification of the order at the factory until delivery from the factory. To determine the time of arrival at the customer site, the appropriate shipping time must be added.

Benefits

There is considerable potential in our new 1LE1/1PC1 series of low-voltage motors. As a consistent further development of our existing motors, the 1LE1/1PC1 motors offer numerous advantages:

Greater efficiency

Instead of cast-aluminum rotors, the new copper technology is used in the EFF1 motors. The motors are therefore considerably more compact. EFF2 and EFF1 motors are based on the same housing. For changeover to the higher efficiency class – from EFF2 to EFF1 – reconstruction of the machine is no longer necessary. Savings are achieved in time and costs. And what is more: You can save a considerable amount of energy with EFF1 motors because they have power losses of up to 40 % less than EFF2 motors. The energy saving potential and life cycle costs of the new motors can be calculated with our SinaSave™ software. You can download the SinaSave program in the Internet using the following link: http://www.siemens.com/energysaving. For more information, see catalog part 11 "Appendix", "Energy-saving program SinaSave". Our 1LE1 motors also impress customers with their extremely long life and their weight-optimized design has a positive effect on the stability of the equipment unit.

More application

The motors are approved and certified for worldwide use and meet high quality standards (confirmed, for example, by CSA [1], UL [2], and CQC [3]).

Improved design

The new, optimized housing in modern EMC design has an attractive appearance and enhances functionality. The rotatable, accessible connection boxes, integral eyebolts, screwed-on feet and reinforced bearing plates ensure this.

Greater output

For the same shaft height, our high-performance motors offer an additional complete rated output level. The best is: We are also consistently implementing energy efficiency improvements here, too. The motors are offered – based on the categories of CEMEP – in high efficiency and improved efficiency versions.

More flexibility

The optimized architecture of the motors makes installation easier in general. Encoders, brakes and separately driven fans can be retrofitted easily. Connection boxes and feet for flexible mounting can be selected. Smaller inventories make stockkeeping easier and motor suppliers can respond to customer requirements more quickly. Optimized manufacturing processes support fast availability. All motors up to 460 V can be operated either directly on line or converter-fed – without the need for any additional measures.

1) Canadian Standard Association
2) Underwriters Laboratories Inc.
3) China Quality Certification

Orientation

Application

As soon as the range of motors and options is complete, it will be possible to use the 1LE1/1PC1 motors from Siemens in all areas and sectors of industry due to their numerous options. They are suitable both for special environmental conditions such as those that predominate in the chemical or petrochemical industries as well as for most climatic requirements such as those of offshore applications. Their large range of mains voltages enables them to be used all over the world.

The wide field of implementation includes the following applications:

- Pumps
- Fans
- Compressors
- Conveyor systems such as cranes, belts and lifting gear
- High-bay warehouses
- Packaging machines
- Automation and Drives

Technical specifications

Technical data at a glance

This table lists the most important technical data. For more information and details, see catalog part 0 “Introduction”.

Type of motor	IEC Squirrel-Cage Motors 1LE1/1PC1
Connection types	Star connection/delta connection You can establish the connection type used from the Order No. supplements in the selection and ordering data for the required motor.
Number of poles	2, 4, 6, 8
Frame sizes	100 L to 160 L
Rated output	0.75 ... 22 kW (motor series 1LE1)/0.3 … 9 kW (motor series 1PC1)
Frequencies	50 Hz and 60 Hz
Versions	Self-ventilated 1LE1 energy-saving motors with: • Improved efficiency (EFF2) • High efficiency (EFF1) Self-ventilated 1LE1 motors with increased output and: • Improved efficiency (EFF2) • High efficiency (EFF1) Forced-air-cooled 1LE1 motors without external fan and fan cover with: • Improved efficiency (EFF2) • High efficiency (EFF1) Self-cooled 1PC1 motors without external fan and fan cover with: • Improved efficiency • High efficiency
Marking	EU/CEMEP efficiency classification, EFF1: 2-, 4-pole, EFF2: 2-, 4-pole US Energy Policy Act EPACT: 2-, 4-, 6-pole
Rated speed (synchronous speed)	750 ... 3000 rpm
Rated torque	9.9 ... 150 Nm (motor series 1LE1)/4.05 … 60 Nm (motor series 1PC1)
Insulation of the stator winding according to EN 60034-1 (IEC 60034-1)	Temperature class 155 (F), used acc. to temperature class 130 (B) (also for motors with increased output) DURIGNIT IR 2000 insulation system
Degree of protection according to EN 60034-5 (IEC 60034-5)	IP55 as standard
Cooling according to EN 60034-6 (IEC 60034-6)	Self-ventilated (motor series 1LE1) frame sizes 100 L to 160 L (IC 411), Forced-air-cooled (motor series 1LE1 with order code F90) frame sizes 100 L to 160 L (IC 416) Self-cooled (motor series 1PC1) frame sizes 100 L to 160 L (IC 410)
Admissible coolant temperature and site altitude	–20 °C ... +40 °C as standard, site altitude up to 1000 m above sea level. See “Coolant temperature and site altitude” in catalog part 0 “Introduction”.
Standard voltages according to EN 60038 (IEC 60038)	50 Hz: 230 V, 400 V, 500 V, 690 V The voltage to be used can be found in the selection and ordering data for the required motor.
Type of construction according to EN 60034-7 (IEC 60034-7)	Without flange: IM B3, IM B6, IM B7, IM B8, IM V5 without protective cover, IM V6, IM V5 with protective cover With flange: IM B5, IM V1 without protective cover, IM V1 with protective cover, IM V3, IM B35 With standard flange and special flange (next larger flange): IM B14, IM V19, IM V18 without protective cover, IM V18 with protective cover, IM B34
Paint finish Suitability of paint finish for climate group according to IEC 60721, Part 2-1	Standard: Color RAL 7030 stone gray See “Paint finish” in catalog part 0 “Introduction”.
Vibration quantity level according to EN 60034-14 (IEC 60034-14)	Level A (normal – without special vibration requirements) Optionally: Level B (with special vibration requirements) See “Balance and vibration quantity” in catalog part 0 “Introduction”.
Shaft extension according to DIN 748 (IEC 60072)	Balance type: Half-key balancing as standard See “Balance and vibration quantity” in catalog part 0 “Introduction”.
Sound pressure level according to DIN EN ISO 1680 (tolerance +3 dB)	The sound pressure level is listed in the selection and ordering data for the required motor.
Weights	The weight is listed in the selection and ordering data for the required motor.
Modular mounting concept	Rotary pulse encoder, brake, separately driven fan or prepared for mountings
Consistent series concept	• Cast housing feet, screw-mounted feet available as an option and retrofittable • Connection box obliquely partitioned and rotatable through 4 x 90° • Bearings at DE and NDE are of identical design, reinforced bearings available as an option
Options	See the selection and ordering data for “Special versions”

Selection and ordering data

Preliminary selection of the motor according to motor type/series, speed or number of poles, frame size, rated output, rated torque, rated speed and rated current

General Line motors with shorter delivery time

Speed	Frame size	Rated output	Rated speed	Rated torque	Rated current at 400 V	Detailed selection and ordering data Page
rpm		kW	rpm	Nm	A	
Aluminum series 1LE1 (motors with external fan)						
3000, 2-pole	**100 L ... 160 L**	3 ... 18.5	2835 ... 2935	10 ... 60	6 ... 34	**1/8 ... 1/11**
1500, 4-pole	**100 L ... 160 L**	2.2 ... 15	1425 ... 1460	14.8 ... 98	4.85 ... 29.5	**1/12 ... 1/15**
1000, 6-pole	**100 L ... 160 L**	1.5 ... 11	930 ... 970	15.3 ... 110	3.95 ... 23.5	**1/16 ... 1/17**

Self-ventilated energy-saving motors with improved efficiency (Improved Efficiency EFF2)

Speed	Frame size	Rated output	Rated speed	Rated torque	Rated current at 400 V	Detailed selection and ordering data Page
rpm		kW	rpm	Nm	A	
Aluminum series 1LE1 (motors with external fan)						
3000, 2-pole	**100 L ... 160 L**	3 ... 18.5	2835 ... 2935	10 ... 60	6 ... 34	**1/18 ... 1/19**
1500, 4-pole	**100 L ... 160 L**	2.2 ... 15	1425 ... 1460	14.8 ... 98	4.85 ... 29.5	**1/18 ... 1/19**
1000, 6-pole	**100 L ... 160 L**	1.5 ... 11	930 ... 970	15.3 ... 110	3.95 ... 23.5	**1/18 ... 1/19**
750, 8-pole	**100 L ... 160 L**	0.75 ... 7.5	700 ... 720	10.4 ... 100	2.65 ... 18.6	**1/18 ... 1/19**

Self-ventilated energy-saving motors with high efficiency (High Efficiency EFF1)

Speed	Frame size	Rated output	Rated speed	Rated torque	Rated current at 400 V	Detailed selection and ordering data Page
rpm		kW/HP	rpm	Nm	A	
Aluminum series 1LE1 (motors with external fan)						
For use according to CEMEP						
3000, 2-pole	**100 L ... 160 L**	3 ... 18.5	2905 ... 2955	9.9 ... 60	5.9 ... 33	**1/22 ... 1/23**
1500, 4-pole	**100 L ... 160 L**	2.2 ... 15	1455 ... 1475	14 ... 97	4.55 ... 27.5	**1/22 ... 1/23**
1000, 6-pole	**100 L ... 160 L**	1.5 ... 11	965 ... 975	15 ... 108	3.5 ... 22	**1/22 ... 1/23**
750, 8-pole	**100 L ... 160 L**	0.75 ... 7.5	720 ... 735	9.9 ... 98	2.75 ... 17.4	**1/22 ... 1/23**
For use in the North American market according to EPACT						
3000, 2-pole	**100 L ... 160 L**	4 ... 25	3520 ... 3565	8.1 ... 50	5.2 ... 29	**1/26 ... 1/27**
1500, 4-pole	**100 L ... 160 L**	3 ... 20	1760 ... 1780	12 ... 80	4.05 ... 24.5	**1/26 ... 1/27**
1000, 6-pole	**100 L ... 160 L**	2 ... 15	1170 ... 1180	12 ... 89	3.15 ... 19.6	**1/26 ... 1/27**

Self-ventilated motors with increased output and improved efficiency (Improved Efficiency EFF2)

Speed	Frame size	Rated output	Rated speed	Rated torque	Rated current at 400 V	Detailed selection and ordering data Page
rpm		kW	rpm	Nm	A	
Aluminum series 1LE1 (motors with external fan)						
3000, 2-pole	**100 L ... 160 L**	4 ... 22	2850 ... 2930	13.3 ... 72	7.9 ... 39.5	**1/30 ... 1/31**
1500, 4-pole	**100 L ... 160 L**	4 ... 18.5	1430 ... 1460	26.8 ... 121	8.5 ... 35	**1/30 ... 1/31**
1000, 6-pole	**100 L ... 160 L**	2.2 ... 15	930 ... 965	22.5 ... 148	5.3 ... 33	**1/30 ... 1/31**

Self-ventilated motors with increased output and high efficiency (High Efficiency EFF1)

Speed	Frame size	Rated output	Rated speed	Rated torque	Rated current at 400 V	Detailed selection and ordering data Page
rpm		kW	rpm	Nm	A	
Aluminum series 1LE1 (motors with external fan)						
3000, 2-pole	**100 L ... 160 L**	4 ... 22	2905 ... 2955	13 ... 71	7.6 ... 38.5	**1/34 ... 1/35**
1500, 4-pole	**100 L ... 160 L**	4 ... 18.5	1460 ... 1475	26 ... 120	8.2 ... 34	**1/34 ... 1/35**
1000, 6-pole	**100 L ... 160 L**	2.2 ... 15	960 ... 975	22 ... 147	4.95 ... 29.5	**1/34 ... 1/35**

Selection and ordering data (continued)

Forced-air cooled motors without external fan and fan cover with improved efficiency (Improved Efficiency EFF2)

Speed	Frame size	Rated output	Rated speed	Rated torque	Rated current at 400 V	Detailed selection and ordering data Page
rpm		kW	rpm	Nm	A	
Aluminum series 1LE1 (motors without external fan and fan cover)						
3000, 2-pole	**100 L ... 160 L**	3 ... 18.5	2835 ... 2935	10 ... 60	6 ... 34	**1/38 ... 1/39**
1500, 4-pole	**100 L ... 160 L**	2.2 ... 15	1425 ... 1460	14.8 ... 98	4.85 ... 29.5	**1/38 ... 1/39**
1000, 6-pole	**100 L ... 160 L**	1.5 ... 11	930 ... 970	15.3 ... 110	3.95 ... 23.5	**1/38 ... 1/39**
750, 8-pole	**100 L ... 160 L**	0.75 ... 7.5	700 ... 720	10.4 ... 100	2.65 ... 18.6	**1/38 ... 1/39**

Forced-air cooled motors without external fan and fan cover with high efficiency (High Efficiency EFF1)

Speed	Frame size	Rated output	Rated speed	Rated torque	Rated current at 400 V	Detailed selection and ordering data Page
rpm		kW	rpm	Nm	A	
Aluminum series 1LE1 (motors without external fan and fan cover)						
3000, 2-pole	**100 L ... 160 L**	3 ... 18.5	2905 ... 2955	9.9 ... 60	5.9 ... 33	**1/42 ... 1/43**
1500, 4-pole	**100 L ... 160 L**	2.2 ... 15	1455 ... 1475	14 ... 97	4.55 ... 27.5	**1/42 ... 1/43**
1000, 6-pole	**100 L ... 160 L**	1.5 ... 11	965 ... 975	15 ... 108	3.5 ... 22	**1/42 ... 1/43**
750, 8-pole	**100 L ... 160 L**	0.75 ... 7.5	720 ... 735	9.9 ... 98	2.75 ... 17.4	**1/42 ... 1/43**

Self-cooled motors without external fan and fan cover with improved efficiency

Speed	Frame size	Rated output	Rated speed	Rated torque	Rated current at 400 V	Detailed selection and ordering data Page
rpm		kW	rpm	Nm	A	
Aluminum series 1PC1 (motors without external fan and fan cover)						
3000, 2-pole	**100 L ... 160 L**	1.2 ... 7.4	2830 ... 2935	4.05 ... 24	2.3 ... 12.9	**1/46 ... 1/47**
1500, 4-pole	**100 L ... 160 L**	0.88 ... 6	1420 ... 1460	5.92 ... 39	1.8... 10.9	**1/46 ... 1/47**
1000, 6-pole	**100 L ... 160 L**	0.6 .. 4.4	930 ... 970	6.12 ... 43	1.4 ... 8.9	**1/46 ... 1/47**
750, 8-pole	**100 L ... 160 L**	0.3 ... 3	695 ... 730	4.05 ... 24	0.97 ... 6.8	**1/46 ... 1/47**

Self-cooled motors without external fan and fan cover with high efficiency

Speed	Frame size	Rated output	Rated speed	Rated torque	Rated current at 400 V	Detailed selection and ordering data Page
rpm		kW	rpm	Nm	A	
Aluminum series 1PC1 (motors without external fan and fan cover)						
3000, 2-pole	**100 L ... 160 L**	1.4 ... 9	2920 ... 2960	4.6 ... 29	2.6 ... 15.2	**1/50 ... 1/51**
1500, 4-pole	**100 L ... 160 L**	1.1 ... 6.2	1460 ... 1480	7.2 ... 40	2.2 ... 11.4	**1/50 ... 1/51**
1000, 6-pole	**100 L ... 160 L**	0.85 ... 6.5	960 ... 975	8.5 ... 64	1.92 ... 13.2	**1/50 ... 1/51**
750, 8-pole	**100 L ... 160 L**	0.37 ... 4.6	720 ... 730	4.8 ... 60	1.28 ... 10.8	**1/50 ... 1/51**

More information

For further information, please get in touch with your local Siemens contact.

At
http://www.siemens.com/automation/partner
you can find details of Siemens contact partners worldwide responsible for particular technologies.

You can obtain in most cases a contact partner for

- technical support
- spare parts/repairs
- service
- training
- sales or
- technical support/engineering

The selection procedure starts with:

- a country
- a product or
- a sector.

By further specifying the remaining criteria you will find exactly the right contact partner with his/her respective expertise.

General Line motors with shorter delivery time

Selection and ordering data

Rated output at 50 Hz P_{rated} kW	Rated output at 60 Hz P_{rated} kW	Frame size FS	Operating values at rated output: Rated speed at 50 Hz n_{rated} rpm	Rated torque at 50 Hz T_{rated} Nm	Efficiency Class according to CEMEP EFF2	Efficiency at 50 Hz 4/4-load η_{rated} %	Efficiency at 50 Hz 3/4-load η_{rated} %	Power factor at 50 Hz 4/4-load $\cos\varphi_{rated}$	Rated current at 400 V, 50 Hz I_{rated} A	Order No.	Price	Weight m kg
Motor version: temperature class 155 (F), IP55 degree of protection, used acc. to temperature class 130 (B)												
2-pole – 3000 rpm at 50 Hz, 3600 rpm at 60 Hz												
230 VΔ/400 VY, 50 Hz; 460 VY, 60 Hz												
• Without flange: IM B3, IM B6, IM B7, IM B8, IM V5 without protective cover, IM V6 [1]												
- Without motor protection												
3	3.45	100 L	2835	10	EFF2	82.6	83.2	0.87	6	**1LE1002-1AA42-2AA0**		20
4	4.6	112 M	2930	13	EFF2	84.8	84.4	0.86	7.9	**1LE1002-1BA22-2AA0**		25
5.5	6.3	132 S	2905	18	EFF2	86	86.6	0.89	10.4	**1LE1002-1CA02-2AA0**		35
7.5	8.6	132 S	2925	24	EFF2	87.6	88.7	0.88	14	**1LE1002-1CA12-2AA0**		40
• With flange: IM B5, IM V1 without protective cover, IM V3[2]												
- Without motor protection												
3	3.45	100 L	2835	10	EFF2	82.6	83.2	0.87	6	**1LE1002-1AA42-2FA0**		21
4	4.6	112 M	2930	13	EFF2	84.8	84.4	0.86	7.9	**1LE1002-1BA22-2FA0**		26
5.5	6.3	132 S	2905	18	EFF2	86	86.6	0.89	10.4	**1LE1002-1CA02-2FA0**		40
7.5	8.6	132 S	2925	24	EFF2	87.6	88.7	0.88	14	**1LE1002-1CA12-2FA0**		45
- With motor protection with PTC thermistors with 3 embedded temperature sensors for tripping												
3	3.45	100 L	2835	10	EFF2	82.6	83.2	0.87	6	**1LE1002-1AA42-2FB0**		21
• With standard flange: IM B14, IM V18 without protective cover, IM V19[3]												
- Without motor protection												
3	3.45	100 L	2835	10	EFF2	82.6	83.3	0.87	6	**1LE1002-1AA42-2KA0**		22
4	4.6	112 M	2930	13	EFF2	84.8	84.4	0.86	7.9	**1LE1002-1BA22-2KA0**		27

These motors are standard painted with special finish color RAL 7030 (stone gray).

Additional options like protective cover and condensation drainage holes are not possible.

(Connection box on top, cast feet, only basic versions possible,
non-drive end (NDE) cannot be modified)

1) Only the type of construction IM B3 will be stamped on the rating plate.
2) Only the type of construction IM B5 will be stamped on the rating plate.
3) Only the type of construction IM B14 will be stamped on the rating plate.

Selection and ordering data (continued)

Order No.	Locked-rotor torque	Locked-rotor current	Breakdown torque	Torque class	Moment of inertia	Noise at rated output		Flange size according to DIN EN 50347
	with direct starting as multiple of rated					Measuring-surface sound pressure level at 50 Hz	Sound pressure level at 50 Hz	
	torque	current	torque					
	T_{LR}/T_{rated}	I_{LR}/I_{rated}	T_B/T_{rated}	CL	J kgm^2	L_{pfA} dB(A)	L_{WA} dB(A)	
Motor version: temperature class 155 (F), IP55 degree of protection, used acc. to temperature class 130 (B)								
2-pole – 3000 rpm at 50 Hz, 3600 rpm at 60 Hz								
230 VΔ/400 VY, 50 Hz; 460 VY, 60 Hz								
• Without flange: IM B3, IM B6, IM B7, IM B8, IM V5 without protective cover, IM V6[1)]								
- Without motor protection								
1LE1002-1AA42-2AA0	3.2	6.2	2.9	16	0.0034	67	79	
1LE1002-1BA22-2AA0	2.7	7.3	3.7	16	0.0067	69	81	
1LE1002-1CA02-2AA0	2	5.6	2.6	16	0.01267	68	80	
1LE1002-1CA12-2AA0	2.2	6.4	3	16	0.01601	68	80	
• With flange: IM B5, IM V1 without protective cover, IM V3[2)]								
- Without motor protection								
1LE1002-1AA42-2FA0	3.2	6.2	2.9	16	0.0034	67	79	FF 215
1LE1002-1BA22-2FA0	2.7	7.3	3.7	16	0.0067	69	81	FF 215
1LE1002-1CA02-2FA0	2	5.6	2.6	16	0.01267	68	80	FF 265
1LE1002-1CA12-2FA0	2.2	6.4	3	16	0.01601	68	80	FF 265
- With motor protection with PTC thermistors with 3 embedded temperature sensors for tripping								
1LE1002-1AA42-2FB0	3.2	6.2	2.9	16	0.0034	67	79	FF 215
• With standard flange: IM B14, IM V18 without protective cover, IM V19[3)]								
- Without motor protection								
1LE1002-1AA42-2KA0	3.2	6.2	2.9	16	0.0034	67	79	FT 130
1LE1002-1BA22-2KA0	2.7	7.3	3.7	16	0.0067	69	81	FT 130

These motors are standard painted with special finish color RAL 7030 (stone gray).

Additional options like protective cover and condensation drainage holes are not possible.

(Connection box on top, cast feet, only basic versions possible,
non-drive end (NDE) cannot be modified)

1) Only the type of construction IM B3 will be stamped on the rating plate.
2) Only the type of construction IM B5 will be stamped on the rating plate.
3) Only the type of construction IM B14 will be stamped on the rating plate.

Selection and ordering data (continued)

Rated output at 50 Hz P_{rated} kW	Rated output at 60 Hz P_{rated} kW	Frame size FS	Operating values at rated output: Rated speed at 50 Hz n_{rated} rpm	Rated torque at 50 Hz T_{rated} Nm	Efficiency Class according to CEMEP EFF2	Efficiency at 50 Hz 4/4-load η_{rated} %	Efficiency at 50 Hz 3/4-load η_{rated} %	Power factor at 50 Hz 4/4-load $\cos\varphi_{rated}$	Rated current at 400 V. 50 Hz I_{rated} A	Order No.	Price	Weight m kg
Motor version: temperature class 155 (F), IP55 degree of protection, used acc. to temperature class 130 (B)												
2-pole – 3000 rpm at 50 Hz, 3600 rpm at 60 Hz												
400 VΔ/690 VY, 50 Hz; 460 VΔ, 60 Hz												
• Without flange: IM B3, IM B6, IM B7, IM B8, IM V5 without protective cover, IM V6[1]												
- Without motor protection												
3	3.45	100 L	2835	10	EFF2	82.6	83.2	0.87	6	**1LE1002-1AA43-4AA0**		20
4	4.6	112 M	2930	13	EFF2	84.8	84.4	0.86	7.9	**1LE1002-1BA23-4AA0**		25
5.5	6.3	132 S	2905	18	EFF2	86	86.6	0.89	10.4	**1LE1002-1CA03-4AA0**		35
7.5	8.6	132 S	2925	24	EFF2	87.6	88.7	0.88	14	**1LE1002-1CA13-4AA0**		40
11	12.6	160 M	2920	36	EFF2	88.4	88.5	0.85	21	**1LE1002-1DA23-4AA0**		60
15	17.3	160 M	2930	49	EFF2	89.5	89.7	0.84	29	**1LE1002-1DA33-4AA0**		68
18.5	21.3	160 L	2935	60	EFF2	90.9	91	0.86	34	**1LE1002-1DA43-4AA0**		78
- With motor protection with PTC thermistors with 3 embedded temperature sensors for tripping												
3	3.45	100 L	2835	10	EFF2	82.6	83.2	0.87	6	**1LE1002-1AA43-4AB0**		20
4	4.6	112 M	2930	13	EFF2	84.8	84.4	0.86	7.9	**1LE1002-1BA23-4AB0**		25
5.5	6.3	132 S	2905	18	EFF2	86	86.6	0.89	10.4	**1LE1002-1CA03-4AB0**		35
7.5	8.6	132 S	2925	24	EFF2	87.6	88.7	0.88	14	**1LE1002-1CA13-4AB0**		40
11	12.6	160 M	2920	36	EFF2	88.4	88.5	0.85	21	**1LE1002-1DA23-4AB0**		60
15	17.3	160 M	2930	49	EFF2	89.5	89.7	0.84	29	**1LE1002-1DA33-4AB0**		68
18.5	21.3	160 L	2935	60	EFF2	90.9	91	0.86	34	**1LE1002-1DA43-4AB0**		78
• With flange: IM B5, IM V1 without protective cover, IM V3[2]												
- Without motor protection												
3	3.45	100 L	2835	10	EFF2	82.6	83.2	0.87	6	**1LE1002-1AA43-4FA0**		21
4	4.6	112 M	2930	13	EFF2	84.8	84.4	0.86	7.9	**1LE1002-1BA23-4FA0**		26
5.5	6.3	132 S	2905	18	EFF2	86	86.6	0.89	10.4	**1LE1002-1CA03-4FA0**		40
7.5	8.6	132 S	2925	24	EFF2	87.6	88.7	0.88	14	**1LE1002-1CA13-4FA0**		45
11	12.6	160 M	2920	36	EFF2	88.4	88.5	0.85	21	**1LE1002-1DA23-4FA0**		69
15	17.3	160 M	2930	49	EFF2	89.5	89.7	0.84	29	**1LE1002-1DA33-4FA0**		77
18.5	21.3	160 L	2935	60	EFF2	90.9	91	0.86	34	**1LE1002-1DA43-4FA0**		87
- With motor protection with PTC thermistors with 3 embedded temperature sensors for tripping												
4	4.6	112 M	2930	13	EFF2	84.8	84.4	0.86	7.9	**1LE1002-1BA23-4FB0**		26
5.5	6.3	132 S	2905	18	EFF2	86	86.6	0.89	10.4	**1LE1002-1CA03-4FB0**		40
7.5	8.6	132 S	2925	24	EFF2	87.6	88.7	0.88	14	**1LE1002-1CA13-4FB0**		45
11	12.6	160 M	2920	36	EFF2	88.4	88.5	0.85	21	**1LE1002-1DA23-4FB0**		69
15	17.3	160 M	2930	49	EFF2	89.5	89.7	0.84	29	**1LE1002-1DA33-4FB0**		77
18.5	21.3	160 L	2935	60	EFF2	90.9	91	0.86	34	**1LE1002-1DA43-4FB0**		87

These motors are standard painted with special finish color RAL 7030 (stone gray).

Additional options like protective cover and condensation drainage holes are not possible.

(Connection box on top, cast feet, only basic versions possible,
non-drive end (NDE) cannot be modified)

1) Only the type of construction IM B3 will be stamped on the rating plate.
2) Only the type of construction IM B5 will be stamped on the rating plate.

Selection and ordering data (continued)

Order No.	Locked-rotor torque with direct starting as multiple of rated torque T_{LR}/T_{rated}	Locked-rotor current I_{LR}/I_{rated}	Breakdown torque T_B/T_{rated}	Torque class CL	Moment of inertia J kgm^2	Noise at rated output: Measuring-surface sound pressure level at 50 Hz L_{pfA} dB(A)	Noise at rated output: Sound pressure level at 50 Hz L_{WA} dB(A)	Flange size according to DIN EN 50347
Motor version: temperature class 155 (F), IP55 degree of protection, used acc. to temperature class 130 (B)								
2-pole – 3000 rpm at 50 Hz, 3600 rpm at 60 Hz								
400 V∆/690 VY, 50 Hz; 460 V∆, 60 Hz								
• Without flange: IM B3, IM B6, IM B7, IM B8, IM V5 without protective cover, IM V6[1]								
- Without motor protection								
1LE1002-1AA43-4AA0	3.2	6.2	2.9	16	0.0034	67	79	
1LE1002-1BA23-4AA0	2.7	7.3	3.7	16	0.0067	69	81	
1LE1002-1CA03-4AA0	2	5.6	2.6	16	0.01267	68	80	
1LE1002-1CA13-4AA0	2.2	6.4	3	16	0.01601	68	80	
1LE1002-1DA23-4AA0	2.1	6.1	2.7	16	0.02971	70	82	
1LE1002-1DA33-4AA0	2.5	6.1	3.2	16	0.03619	70	82	
1LE1002-1DA43-4AA0	2.5	7	3.2	16	0.04395	70	82	
- With motor protection with PTC thermistors with 3 embedded temperature sensors for tripping								
1LE1002-1AA43-4AB0	3.2	6.2	2.9	16	0.0034	67	79	
1LE1002-1BA23-4AB0	2.7	7.3	3.7	16	0.0067	69	81	
1LE1002-1CA03-4AB0	2	5.6	2.6	16	0.01267	68	80	
1LE1002-1CA13-4AB0	2.2	6.4	3	16	0.01601	68	80	
1LE1002-1DA23-4AB0	2.1	6.1	2.7	16	0.02971	70	82	
1LE1002-1DA33-4AB0	2.5	6.1	3.2	16	0.03619	70	82	
1LE1002-1DA43-4AB0	2.5	7	3.2	16	0.04395	70	82	
• With flange: IM B5, IM V1 without protective cover, IM V3[2]								
- Without motor protection								
1LE1002-1AA43-4FA0	3.2	6.2	2.9	16	0.0034	67	79	FF 215
1LE1002-1BA23-4FA0	2.7	7.3	3.7	16	0.0067	69	81	FF 215
1LE1002-1CA03-4FA0	2	5.6	2.6	16	0.01267	68	80	FF 265
1LE1002-1CA13-4FA0	2.2	6.4	3	16	0.01601	68	80	FF 265
1LE1002-1DA23-4FA0	2.1	6.1	2.7	16	0.02971	70	82	FF 300
1LE1002-1DA33-4FA0	2.5	6.1	3.2	16	0.03619	70	82	FF 300
1LE1002-1DA43-4FA0	2.5	7	3.2	16	0.04395	70	82	FF 300
- With motor protection with PTC thermistors with 3 embedded temperature sensors for tripping								
1LE1002-1BA23-4FB0	2.7	7.3	3.7	16	0.0067	69	81	FF 215
1LE1002-1CA03-4FB0	2	5.6	2.6	16	0.01267	68	80	FF 265
1LE1002-1CA13-4FB0	2.2	6.4	3	16	0.01601	68	80	FF 265
1LE1002-1DA23-4FB0	2.1	6.1	2.7	16	0.02971	70	82	FF 300
1LE1002-1DA33-4FB0	2.5	6.1	3.2	16	0.03619	70	82	FF 300
1LE1002-1DA43-4FB0	2.5	7	3.2	16	0.04395	70	82	FF 300

These motors are standard painted with special finish color RAL 7030 (stone gray).

Additional options like protective cover and condensation drainage holes are not possible.

(Connection box on top, cast feet, only basic versions possible,
non-drive end (NDE) cannot be modified)

1) Only the type of construction IM B3 will be stamped on the rating plate.

2) Only the type of construction IM B5 will be stamped on the rating plate.

Selection and ordering data (continued)

Rated output at 50 Hz P_{rated} kW	Rated output at 60 Hz P_{rated} kW	Frame size FS	Operating values at rated output: Rated speed at 50 Hz n_{rated} rpm	Rated torque at 50 Hz T_{rated} Nm	Efficiency Class according to CEMEP EFF2	Efficiency at 50 Hz 4/4-load η_{rated} %	Efficiency at 50 Hz 3/4-load η_{rated} %	Power factor at 50 Hz 4/4-load $\cos\varphi_{rated}$	Rated current at 400 V. 50 Hz I_{rated} A	Order No.	Price	Weight m kg
Motor version: temperature class 155 (F), IP55 degree of protection, used acc. to temperature class 130 (B)												
4-pole – 1500 rpm at 50 Hz, 1800 rpm at 60 Hz												
230 VΔ/400 VY, 50 Hz; 460 VY, 60 Hz												
• Without flange: IM B3, IM B6, IM B7, IM B8, IM V5 without protective cover, IM V6[1]												
- Without motor protection												
2.2	2.55	100 L	1425	14.8	EFF2	81	84	0.81	4.85	**1LE1002-1AB42-2AA0**		18
3	3.45	100 L	1425	20.2	EFF2	82.8	83.6	0.85	6.2	**1LE1002-1AB52-2AA0**		22
4	4.6	112 M	1435	27	EFF2	84.2	85.1	0.84	8.2	**1LE1002-1BB22-2AA0**		27
5.5	6.3	132 S	1450	36	EFF2	86	86.5	0.83	11.2	**1LE1002-1CB02-2AA0**		38
7.5	8.6	132 M	1450	49	EFF2	87	87.4	0.83	15	**1LE1002-1CB22-2AA0**		44
11	12.6	160 M	1460	72	EFF2	88.4	88.1	0.82	22	**1LE1002-1DB22-2AA0**		62
15	17.3	160 L	1460	98	EFF2	89.4	89.7	0.82	29.5	**1LE1002-1DB42-2AA0**		73
- With motor protection with PTC thermistors with 3 embedded temperature sensors for tripping												
2.2	2.55	100 L	1425	14.8	EFF2	81	84	0.81	4.85	**1LE1002-1AB42-2AB0**		18
• With flange: IM B5, IM V1 without protective cover, IM V3[2]												
- Without motor protection												
2.2	2.55	100 L	1425	14.8	EFF2	81	84	0.81	4.85	**1LE1002-1AB42-2FA0**		19
3	3.45	100 L	1425	20.2	EFF2	82.8	83.6	0.85	6.2	**1LE1002-1AB52-2FA0**		23
4	4.6	112 M	1435	27	EFF2	84.2	85.1	0.84	8.2	**1LE1002-1BB22-2FA0**		28
5.5	6.3	132 S	1450	36	EFF2	86	86.5	0.83	11.2	**1LE1002-1CB02-2FA0**		43
7.5	8.6	132 M	1450	49	EFF2	87	87.4	0.83	15	**1LE1002-1CB22-2FA0**		49
11	12.6	160 M	1460	72	EFF2	88.4	88.1	0.82	22	**1LE1002-1DB22-2FA0**		71
15	17.3	160 L	1460	98	EFF2	89.4	89.7	0.82	29.5	**1LE1002-1DB42-2FA0**		82
- With motor protection with PTC thermistors with 3 embedded temperature sensors for tripping												
2.2	2.55	100 L	1425	14.8	EFF2	81	84	0.81	4.85	**1LE1002-1AB42-2FB0**		19
3	3.45	100 L	1425	20.2	EFF2	82.8	83.6	0.85	6.2	**1LE1002-1AB52-2FB0**		23
4	4.6	112 M	1435	27	EFF2	84.2	85.1	0.84	8.2	**1LE1002-1BB22-2FB0**		28
• With standard flange: IM B14, IM V18 without protective cover, IM V19[3]												
- Without motor protection												
2.2	2.55	100 L	1425	14.8	EFF2	81	84	0.81	4.85	**1LE1002-1AB42-2KA0**		20
3	3.45	100 L	1425	20.2	EFF2	82.8	83.6	0.85	6.2	**1LE1002-1AB52-2KA0**		24
4	4.6	112 M	1435	27	EFF2	84.2	85.1	0.84	8.2	**1LE1002-1BB22-2KA0**		29

These motors are standard painted with special finish color RAL 7030 (stone gray).

Additional options like protective cover and condensation drainage holes are not possible.

(Connection box on top, cast feet, only basic versions possible,
non-drive end (NDE) cannot be modified)

1) Only the type of construction IM B3 will be stamped on the rating plate.
2) Only the type of construction IM B5 will be stamped on the rating plate.
3) Only the type of construction IM B14 will be stamped on the rating plate.

Selection and ordering data (continued)

Order No.	Locked-rotor torque	Locked-rotor current	Breakdown torque	Torque class	Moment of inertia	Noise at rated output		Flange size according to DIN EN 50347
	with direct starting as multiple of rated					Measuring-surface sound pressure level at 50 Hz	Sound pressure level at 50 Hz	
	torque	current	torque					
	T_{LR}/T_{rated}	I_{LR}/I_{rated}	T_B/T_{rated}	CL	J kgm^2	L_{pfA} dB(A)	L_{WA} dB(A)	
Motor version: temperature class 155 (F), IP55 degree of protection, used acc. to temperature class 130 (B)								
4-pole – 1500 rpm at 50 Hz, 1800 rpm at 60 Hz								
230 VΔ/400 VY, 50 Hz; 460 VY, 60 Hz								
• Without flange: IM B3, IM B6, IM B7, IM B8, IM V5 without protective cover, IM V6[1)]								
- Without motor protection								
1LE1002-1AB42-2AA0	2.3	5.1	2.7	16	0.0059	60	72	
1LE1002-1AB52-2AA0	2.4	5.4	2.6	16	0.0078	60	72	
1LE1002-1BB22-2AA0	2.2	5.3	2.6	16	0.0102	58	70	
1LE1002-1CB02-2AA0	2.3	6.2	2.7	16	0.0186	64	76	
1LE1002-1CB22-2AA0	2.5	6.6	2.9	16	0.02371	64	76	
1LE1002-1DB22-2AA0	2.3	6.4	3.1	16	0.04395	65	77	
1LE1002-1DB42-2AA0	2.5	7	3.4	16	0.05616	65	77	
- With motor protection with PTC thermistors with 3 embedded temperature sensors for tripping								
1LE1002-1AB42-2AB0	2.3	5.1	2.7	16	0.0059	63	75	
• With flange: IM B5, IM V1 without protective cover, IM V3[2)]								
- Without motor protection								
1LE1002-1AB42-2FA0	2.3	5.1	2.7	16	0.0059	60	72	FF 215
1LE1002-1AB52-2FA0	2.4	5.4	2.6	16	0.0078	60	72	FF 215
1LE1002-1BB22-2FA0	2.2	5.3	2.6	16	0.0102	58	70	FF 215
1LE1002-1CB02-2FA0	2.3	6.2	2.7	16	0.0186	64	76	FF 265
1LE1002-1CB22-2FA0	2.5	6.6	2.9	16	0.02371	64	76	FF 265
1LE1002-1DB22-2FA0	2.3	6.4	3.1	16	0.04395	65	77	FF 300
1LE1002-1DB42-2FA0	2.5	7	3.4	16	0.05616	65	77	FF 300
- With motor protection with PTC thermistors with 3 embedded temperature sensors for tripping								
1LE1002-1AB42-2FB0	2.3	5.1	2.7	16	0.0059	60	72	FF 215
1LE1002-1AB52-2FB0	2.4	5.4	2.6	16	0.0078	60	72	FF 215
1LE1002-1BB22-2FB0	2.2	5.3	2.6	16	0.0102	58	70	FF 215
• With standard flange: IM B14, IM V18 without protective cover, IM V19[3)]								
- Without motor protection								
1LE1002-1AB42-2KA0	2.3	5.1	2.7	16	0.0059	60	72	FT 130
1LE1002-1AB52-2KA0	2.4	5.4	2.6	16	0.0078	63	75	FT 130
1LE1002-1BB22-2KA0	2.2	5.3	2.6	16	0.0102	58	70	FT 130

These motors are standard painted with special finish color RAL 7030 (stone gray).

Additional options like protective cover and condensation drainage holes are not possible.

(Connection box on top, cast feet, only basic versions possible,
non-drive end (NDE) cannot be modified)

1) Only the type of construction IM B3 will be stamped on the rating plate.
2) Only the type of construction IM B5 will be stamped on the rating plate.
3) Only the type of construction IM B14 will be stamped on the rating plate.

Selection and ordering data (continued)

Rated output at 50 Hz P_{rated} kW	Rated output at 60 Hz P_{rated} kW	Frame size FS	Operating values at rated output: Rated speed at 50 Hz n_{rated} rpm	Rated torque at 50 Hz T_{rated} Nm	Efficiency Class according to CEMEP EFF2	Efficiency at 50 Hz 4/4-load η_{rated} %	Efficiency at 50 Hz 3/4-load η_{rated} %	Power factor at 50 Hz 4/4-load $\cos\varphi_{rated}$	Rated current at 400 V. 50 Hz I_{rated} A	Order No.	Price	Weight m kg
Motor version: temperature class 155 (F), IP55 degree of protection, used acc. to temperature class 130 (B)												
4-pole – 1500 rpm at 50 Hz, 1800 rpm at 60 Hz												
400 VΔ/690 VY, 50 Hz; 460 VΔ, 60 Hz												
• Without flange: IM B3, IM B6, IM B7, IM B8, IM V5 without protective cover, IM V6[1)]												
- Without motor protection												
2.2	2.55	100 L	1425	14.8	EFF2	81	84	0.81	4.85	**1LE1002-1AB43-4AA0**		18
3	3.45	100 L	1425	20.2	EFF2	82.8	83.6	0.85	6.2	**1LE1002-1AB53-4AA0**		22
4	4.6	112 M	1435	27	EFF2	84.2	85.1	0.84	8.2	**1LE1002-1BB23-4AA0**		27
5.5	6.3	132 S	1450	36	EFF2	86	86.5	0.83	11.2	**1LE1002-1CB03-4AA0**		38
7.5	8.6	132 M	1450	49	EFF2	87	87.4	0.83	15	**1LE1002-1CB23-4AA0**		44
11	12.6	160 M	1460	72	EFF2	88.4	88.1	0.82	22	**1LE1002-1DB23-4AA0**		62
15	17.3	160 L	1460	98	EFF2	89.4	89.7	0.82	29.5	**1LE1002-1DB43-4AA0**		73
- With motor protection with PTC thermistors with 3 embedded temperature sensors for tripping												
2.2	2.55	100 L	1425	14.8	EFF2	81	84	0.81	4.85	**1LE1002-1AB43-4AB0**		18
3	3.45	100 L	1425	20.2	EFF2	82.8	83.6	0.85	6.2	**1LE1002-1AB53-4AB0**		22
4	4.6	112 M	1435	27	EFF2	84.2	85.1	0.84	8.2	**1LE1002-1BB23-4AB0**		27
5.5	6.3	132 S	1450	36	EFF2	86	86.5	0.83	11.2	**1LE1002-1CB03-4AB0**		38
7.5	8.6	132 M	1450	49	EFF2	87	87.4	0.83	15	**1LE1002-1CB23-4AB0**		44
11	12.6	160 M	1460	72	EFF2	88.4	88.1	0.82	22	**1LE1002-1DB23-4AB0**		62
15	17.3	160 L	1460	98	EFF2	89.4	89.7	0.82	29.5	**1LE1002-1DB43-4AB0**		73
• With flange: IM B5, IM V1 without protective cover, IM V3[2)]												
- Without motor protection												
2.2	2.55	100 L	1425	14.8	EFF2	81	84	0.81	4.85	**1LE1002-1AB43-4FA0**		19
3	3.45	100 L	1425	20.2	EFF2	82.8	83.6	0.85	6.2	**1LE1002-1AB53-4FA0**		23
4	4.6	112 M	1435	27	EFF2	84.2	85.1	0.84	8.2	**1LE1002-1BB23-4FA0**		28
5.5	6.3	132 S	1450	36	EFF2	86	86.5	0.83	11.2	**1LE1002-1CB03-4FA0**		43
7.5	8.6	132 M	1450	49	EFF2	87	87.4	0.83	15	**1LE1002-1CB23-4FA0**		49
11	12.6	160 M	1460	72	EFF2	88.4	88.1	0.82	22	**1LE1002-1DB23-4FA0**		71
15	17.3	160 L	1460	98	EFF2	89.4	89.7	0.82	29.5	**1LE1002-1DB43-4FA0**		82
- With motor protection with PTC thermistors with 3 embedded temperature sensors for tripping												
4	4.6	112 M	1435	27	EFF2	84.2	85.1	0.84	8.2	**1LE1002-1BB23-4FB0**		28
5.5	6.3	132 S	1450	36	EFF2	86	86.5	0.83	11.2	**1LE1002-1CB03-4FB0**		43
7.5	8.6	132 M	1450	49	EFF2	87	87.4	0.83	15	**1LE1002-1CB23-4FB0**		49
11	12.6	160 M	1460	72	EFF2	88.4	88.1	0.82	22	**1LE1002-1DB23-4FB0**		71
15	17.3	160 L	1460	98	EFF2	89.4	89.7	0.82	29.5	**1LE1002-1DB43-4FB0**		82
• With flange: IM B35												
- Without motor protection												
5.5	6.3	132 S	1450	36	EFF2	86	86.5	0.83	11.2	**1LE1002-1CB03-4JA0**		43
7.5	8.6	132 M	1450	49	EFF2	87	87.4	0.83	15	**1LE1002-1CB23-4JA0**		49
11	12.6	160 M	1460	72	EFF2	88.4	88.1	0.82	22	**1LE1002-1DB23-4JA0**		71
15	17.3	160 L	1460	98	EFF2	89.4	89.7	0.82	29.5	**1LE1002-1DB43-4JA0**		82

These motors are standard painted with special finish color RAL 7030 (stone gray).

Additional options like protective cover and condensation drainage holes are not possible.

(Connection box on top, cast feet, only basic versions possible,
non-drive end (NDE) cannot be modified)

1) Only the type of construction IM B3 will be stamped on the rating plate.

2) Only the type of construction IM B5 will be stamped on the rating plate.

Selection and ordering data (continued)

Order No.	Locked-rotor torque with direct starting as multiple of rated torque T_{LR}/T_{rated}	Locked-rotor current I_{LR}/I_{rated}	Breakdown torque T_B/T_{rated}	Torque class CL	Moment of inertia J kgm^2	Noise at rated output: Measuring-surface sound pressure level at 50 Hz L_{pfA} dB(A)	Noise at rated output: Sound pressure level at 50 Hz L_{WA} dB(A)	Flange size according to DIN EN 50347
Motor version: temperature class 155 (F), IP55 degree of protection, used acc. to temperature class 130 (B)								
4-pole – 1500 rpm at 50 Hz, 1800 rpm at 60 Hz								
400 VΔ/690 VY, 50 Hz; 460 VΔ, 60 Hz								
• Without flange: IM B3, IM B6, IM B7, IM B8, IM V5 without protective cover, IM V6[1]								
- Without motor protection								
1LE1002-1AB43-4AA0	2.3	5.1	2.7	16	0.0059	60	72	
1LE1002-1AB53-4AA0	2.4	5.4	2.6	16	0.0078	60	72	
1LE1002-1BB23-4AA0	2.2	5.3	2.6	16	0.0102	58	70	
1LE1002-1CB03-4AA0	2.3	6.2	2.7	16	0.0186	64	76	
1LE1002-1CB23-4AA0	2.5	6.6	2.9	16	0.02371	64	76	
1LE1002-1DB23-4AA0	2.3	6.4	3.1	16	0.04395	65	77	
1LE1002-1DB43-4AA0	2.5	7	3.4	16	0.05616	65	77	
- With motor protection with PTC thermistors with 3 embedded temperature sensors for tripping								
1LE1002-1AB43-4AB0	2.3	5.1	2.7	16	0.0059	60	72	
1LE1002-1AB53-4AB0	2.4	5.4	2.6	16	0.0078	60	72	
1LE1002-1BB23-4AB0	2.2	5.3	2.6	16	0.0102	58	70	
1LE1002-1CB03-4AB0	2.3	6.2	2.7	16	0.0186	64	76	
1LE1002-1CB23-4AB0	2.5	6.6	2.9	16	0.02371	64	76	
1LE1002-1DB23-4AB0	2.3	6.4	3.1	16	0.04395	65	77	
1LE1002-1DB43-4AB0	2.5	7	3.4	16	0.05616	65	77	
• With flange: IM B5, IM V1 without protective cover, IM V3[2]								
- Without motor protection								
1LE1002-1AB43-4FA0	2.3	5.1	2.7	16	0.0059	60	72	FF 215
1LE1002-1AB53-4FA0	2.4	5.4	2.6	16	0.0078	60	72	FF 215
1LE1002-1BB23-4FA0	2.2	5.3	2.6	16	0.0102	58	70	FF 215
1LE1002-1CB03-4FA0	2.3	6.2	2.7	16	0.0186	64	76	FF 265
1LE1002-1CB23-4FA0	2.5	6.6	2.9	16	0.02371	64	76	FF 265
1LE1002-1DB23-4FA0	2.3	6.4	3.1	16	0.04395	65	77	FF 300
1LE1002-1DB43-4FA0	2.5	7	3.4	16	0.05616	65	77	FF 300
- With motor protection with PTC thermistors with 3 embedded temperature sensors for tripping								
1LE1002-1BB23-4FB0	2.2	5.3	2.6	16	0.0102	58	70	FF 215
1LE1002-1CB03-4FB0	2.3	6.2	2.7	16	0.0186	64	76	FF 265
1LE1002-1CB23-4FB0	2.5	6.6	2.9	16	0.02371	64	76	FF 265
1LE1002-1DB23-4FB0	2.3	6.4	3.1	16	0.04395	65	77	FF 300
1LE1002-1DB43-4FB0	2.5	7	3.4	16	0.05616	65	77	FF 300
• With flange: IM B35								
- Without motor protection								
1LE1002-1CB03-4JA0	2.3	6.2	2.7	16	0.0186	64	76	FF 265
1LE1002-1CB23-4JA0	2.5	6.6	2.9	16	0.02371	64	76	FF 265
1LE1002-1DB23-4JA0	2.3	6.4	3.1	16	0.04395	65	77	FF 300
1LE1002-1DB43-4JA0	2.5	7	3.4	16	0.05616	65	77	FF 300

These motors are standard painted with special finish color RAL 7030 (stone gray).

Additional options like protective cover and condensation drainage holes are not possible.

(Connection box on top, cast feet, only basic versions possible,
non-drive end (NDE) cannot be modified)

1) Only the type of construction IM B3 will be stamped on the rating plate.
2) Only the type of construction IM B5 will be stamped on the rating plate.

Selection and ordering data (continued)

Rated output at 50 Hz P_{rated} kW	Rated output at 60 Hz P_{rated} kW	Frame size FS	Operating values at rated output: Rated speed at 50 Hz n_{rated} rpm	Rated torque at 50 Hz T_{rated} Nm	Efficiency Class according to CEMEP EFF2	Efficiency at 50 Hz 4/4-load η_{rated} %	Efficiency at 50 Hz 3/4-load η_{rated} %	Power factor at 50 Hz 4/4-load $\cos\varphi_{rated}$	Rated current at 400 V. 50 Hz I_{rated} A	Order No.	Price	Weight m kg
Motor version: temperature class 155 (F), IP55 degree of protection, used acc. to temperature class 130 (B)												
6-pole – 1000 rpm at 50 Hz, 1200 rpm at 60 Hz												
230 VΔ/400 VY, 50 Hz; 460 VY, 60 Hz												
• Without flange: IM B3, IM B6, IM B7, IM B8, IM V5 without protective cover, IM V6[1]												
- Without motor protection												
1.5	1.75	100 L	940	15.3		74	72.6	0.74	3.95	**1LE1002-1AC42-2AA0**		19
2.2	2.55	112 M	930	23		78	78.1	0.77	5.3	**1LE1002-1BC22-2AA0**		25
3	3.45	132 S	955	30		80	79.4	0.74	7.3	**1LE1002-1CC02-2AA0**		34
4	4.6	132 M	950	40		83	83.4	0.76	9.2	**1LE1002-1CC22-2AA0**		39
5.5	6.3	132 M	950	55		85	85.3	0.75	12.4	**1LE1002-1CC32-2AA0**		48
• With flange: IM B5, IM V1 without protective cover, IM V3[2]												
- Without motor protection												
1.5	1.75	100 L	940	15.3		74	72.6	0.74	3.95	**1LE1002-1AC42-2FA0**		20
2.2	2.55	112 M	930	23		78	78.1	0.77	5.3	**1LE1002-1BC22-2FA0**		26
3	3.45	132 S	955	30		80	79.4	0.74	7.3	**1LE1002-1CC02-2FA0**		39
4	4.6	132 M	950	40		83	83.4	0.76	9.2	**1LE1002-1CC22-2FA0**		44
- With motor protection with PTC thermistors with 3 embedded temperature sensors for tripping												
1.5	1.75	100 L	940	15.3		74	72.6	0.74	3.95	**1LE1002-1AC42-2FB0**		20
2.2	2.55	112 M	930	23		78	78.1	0.77	5.3	**1LE1002-1BC22-2FB0**		26
3	3.45	132 S	955	30		80	79.4	0.74	7.3	**1LE1002-1CC02-2FB0**		39
• With standard flange: IM B14, IM V18 without protective cover, IM V19[3]												
- Without motor protection												
1.5	1.75	100 L	940	15.3		74	72.6	0.74	3.95	**1LE1002-1AC42-2KA0**		21
2.2	2.55	112 M	930	23		78	78.1	0.77	5.3	**1LE1002-1BC22-2KA0**		27
400 VΔ/690 VY, 50 Hz; 460 VΔ, 60 Hz												
• Without flange: IM B3, IM B6, IM B7, IM B8, IM V5 without protective cover, IM V6[1]												
- Without motor protection												
3	3.45	132 S	955	30		80	79.4	0.74	7.3	**1LE1002-1CC03-4AA0**		34
4	4.6	132 M	950	40		83	83.4	0.76	9.2	**1LE1002-1CC23-4AA0**		39
5.5	6.3	132 M	950	55		85	85.3	0.75	12.4	**1LE1002-1CC33-4AA0**		48
7.5	8.6	160 M	970	75		86	85.4	0.73	17.2	**1LE1002-1DC23-4AA0**		72
11	12.6	160 L	965	110		87.6	87.9	0.77	23.5	**1LE1002-1DC43-4AA0**		92
- With motor protection with PTC thermistors with 3 embedded temperature sensors for tripping												
3	3.45	132 S	955	30		80	79.4	0.74	7.3	**1LE1002-1CC03-4AB0**		34
4	4.6	132 M	950	40		83	83.4	0.76	9.2	**1LE1002-1CC23-4AB0**		39
5.5	6.3	132 M	950	55		85	85.3	0.75	12.4	**1LE1002-1CC33-4AB0**		48
7.5	8.6	160 M	970	75		86	86.5	0.73	17.2	**1LE1002-1DC23-4AB0**		72
11	12.6	160 L	965	110		87.6	87.9	0.77	23.5	**1LE1002-1DC43-4AB0**		92
• With flange: IM B5, IM V1 without protective cover, IM V3[2]												
- Without motor protection												
3	3.45	132 S	955	30		80	79.4	0.74	7.3	**1LE1002-1CC03-4FA0**		39
4	4.6	132 M	950	40		83	83.4	0.76	9.2	**1LE1002-1CC23-4FA0**		44
5.5	6.3	132 M	950	55		85	85.3	0.75	12.4	**1LE1002-1CC33-4FA0**		53
7.5	8.6	160 M	970	75		86	85.4	0.73	17.2	**1LE1002-1DC23-4FA0**		81
11	12.6	160 L	965	110		87.6	87.9	0.77	23.5	**1LE1002-1DC43-4FA0**		101
- With motor protection with PTC thermistors with 3 embedded temperature sensors for tripping												
4	4.6	132 M	950	40		83	83.4	0.76	9.2	**1LE1002-1CC23-4FB0**		44
5.5	6.3	132 M	950	55		85	85.3	0.75	12.4	**1LE1002-1CC33-4FB0**		53
7.5	8.6	160 M	970	75		86	85.4	0.73	17.2	**1LE1002-1DC23-4FB0**		81
11	12.6	160 L	965	110		87.6	87.9	0.77	23.5	**1LE1002-1DC43-4FB0**		101

These motors are standard painted with special finish color RAL 7030 (stone gray).

Additional options like protective cover and condensation drainage holes are not possible.

(Connection box on top, cast feet, only basic versions possible, non-drive end (NDE) cannot be modified)

1) Only the type of construction IM B3 will be stamped on the rating plate.
2) Only the type of construction IM B5 will be stamped on the rating plate.
3) Only the type of construction IM B14 will be stamped on the rating plate.

Selection and ordering data (continued)

Order No.	Locked-rotor torque with direct starting as multiple of rated torque T_{LR}/T_{rated}	Locked-rotor current I_{LR}/I_{rated}	Breakdown torque T_B/T_{rated}	Torque class CL	Moment of inertia J kgm^2	Noise at rated output: Measuring-surface sound pressure level at 50 Hz L_{pfA} dB(A)	Noise at rated output: Sound pressure level at 50 Hz L_{WA} dB(A)	Flange size according to DIN EN 50347
Motor version: temperature class 155 (F), IP55 degree of protection, used acc. to temperature class 130 (B)								
6-pole – 1000 rpm at 50 Hz, 1200 rpm at 60 Hz								
230 VΔ/400 VY, 50 Hz; 460 VY, 60 Hz								
• Without flange: IM B3, IM B6, IM B7, IM B8, IM V5 without protective cover, IM V6[1]								
- Without motor protection								
1LE1002-1AC42-2AA0	2	4	2.2	16	0.0065	59	71	
1LE1002-1BC22-2AA0	2.1	4.1	2.4	16	0.0065	57	69	
1LE1002-1CC02-2AA0	2	4.6	2.6	16	0.0167	63	75	
1LE1002-1CC22-2AA0	2.1	4.7	2.5	16	0.02116	63	75	
1LE1002-1CC32-2AA0	2.5	5.2	2.8	16	0.02734	63	75	
• With flange: IM B5, IM V1 without protective cover, IM V3[2]								
- Without motor protection								
1LE1002-1AC42-2FA0	2	4	2.2	16	0.0065	59	71	FF 215
1LE1002-1BC22-2FA0	2.3	4.1	2.5	16	0.0092	57	69	FF 215
1LE1002-1CC02-2FA0	2	4.6	2.6	16	0.0167	63	75	FF 265
1LE1002-1CC22-2FA0	2.1	4.7	2.5	16	0.02116	63	75	FF 265
- With motor protection with PTC thermistors with 3 embedded temperature sensors for tripping								
1LE1002-1AC42-2FB0	2	4	2.2	16	0.0065	59	71	FF 215
1LE1002-1BC22-2FB0	2.3	4.1	2.5	16	0.0092	68	80	FF 215
1LE1002-1CC02-2FB0	2	4.6	2.6	16	0.0167	63	75	FF 265
• With standard flange: IM B14, IM V18 without protective cover, IM V19[3]								
- Without motor protection								
1LE1002-1AC42-2KA0	2	4	2.2	16	0.0065	59	71	FT 130
1LE1002-1BC22-2KA0	2.3	4.1	2.5	16	0.0092	68	80	FT 130
400 VΔ/690 VY, 50 Hz; 460 VΔ, 60 Hz								
• Without flange: IM B3, IM B6, IM B7, IM B8, IM V5 without protective cover, IM V6[1]								
- Without motor protection								
1LE1002-1CC03-4AA0	2	4.6	2.6	16	0.017	63	75	
1LE1002-1CC23-4AA0	2.1	4.7	2.5	16	0.02116	63	75	
1LE1002-1CC33-4AA0	2.5	5.2	2.8	16	0.02734	63	75	
1LE1002-1DC23-4AA0	2.1	5.5	2.9	16	0.04993	68	80	
1LE1002-1DC43-4AA0	1.9	5.9	2.7	16	0.0678	68	80	
- With motor protection with PTC thermistors with 3 embedded temperature sensors for tripping								
1LE1002-1CC03-4AB0	2	4.6	2.6	16	0.0167	63	75	
1LE1002-1CC23-4AB0	2.1	4.7	2.5	16	0.02116	63	75	
1LE1002-1CC33-4AB0	2.5	5.2	2.8	16	0.02734	63	75	
1LE1002-1DC23-4AB0	2.1	5.5	2.9	16	0.04993	68	80	
1LE1002-1DC43-4AB0	1.9	5.9	2.7	16	0.0678	68	80	
• With flange: IM B5, IM V1 without protective cover, IM V3[2]								
- Without motor protection								
1LE1002-1CC03-4FA0	2	4.6	2.6	16	0.0167	63	75	FF 265
1LE1002-1CC23-4FA0	2.1	4.7	2.5	16	0.02116	63	75	FF 265
1LE1002-1CC33-4FA0	2.5	5.2	2.8	16	0.02734	63	75	FF 265
1LE1002-1DC23-4FA0	2.1	5.5	2.9	16	0.04993	68	80	FF 300
1LE1002-1DC43-4FA0	1.9	5.9	2.7	16	0.0678	68	80	FF 300
- With motor protection with PTC thermistors with 3 embedded temperature sensors for tripping								
1LE1002-1CC23-4FB0	2.1	4.7	2.5	16	0.02116	63	75	FF 265
1LE1002-1CC33-4FB0	2.5	5.2	2.8	16	0.02734	63	75	FF 265
1LE1002-1DC23-4FB0	2.1	5.5	2.9	16	0.04993	68	80	FF 300
1LE1002-1DC43-4FB0	1.9	5.9	2.7	16	0.0678	68	80	FF 300

These motors are standard painted with special finish color RAL 7030 (stone gray).

Additional options like protective cover and condensation drainage holes are not possible.

(Connection box on top, cast feet, only basic versions possible,
non-drive end (NDE) cannot be modified)

1) Only the type of construction IM B3 will be stamped on the rating plate.
2) Only the type of construction IM B5 will be stamped on the rating plate.
3) Only the type of construction IM B14 will be stamped on the rating plate.

Self-ventilated energy-saving motors with improved efficiency

Selection and ordering data

Rated output at 50 Hz P_{rated} kW	Rated output at 60 Hz P_{rated} kW	Frame size FS	Operating values at rated output: Rated speed at 50 Hz n_{rated} rpm	Rated torque at 50 Hz T_{rated} Nm	Efficiency Class according to CEMEP EFF2	Efficiency at 50 Hz 4/4-load η_{rated} %	Efficiency at 50 Hz 3/4-load η_{rated} %	Power factor at 50 Hz 4/4-load $\cos\varphi_{rated}$	Rated current at 400 V, 50 Hz I_{rated} A	Order No. For Order No. supplements for voltage, type of construction, motor protection and connection box, see table from Page 1/20.	Price IM B3 type of construction	Weight IM B3 type of construction approx. m kg
Motor version: temperature class 155 (F), IP55 degree of protection, used acc. to temperature class 130 (B)												
2-pole – 3000 rpm at 50 Hz, 3600 rpm at 60 Hz												
3	3.45	100 L	2835	10	EFF2	82.6	83.2	0.87	6	**1LE1002-1AA4❑-❑❑❑❑**		20
4	4.6	112 M	2930	13	EFF2	84.8	84.4	0.86	7.9	**1LE1002-1BA2❑-❑❑❑❑**		25
5.5	6.3	132 S	2905	18	EFF2	86	86.6	0.89	10.4	**1LE1002-1CA0❑-❑❑❑❑**		35
7.5	8.6	132 S	2925	24	EFF2	87.6	88.7	0.88	14	**1LE1002-1CA1❑-❑❑❑❑**		40
11	12.6	160 M	2920	36	EFF2	88.4	88.5	0.85	21	**1LE1002-1DA2❑-❑❑❑❑**		60
15	17.3	160 M	2930	49	EFF2	89.5	89.7	0.84	29	**1LE1002-1DA3❑-❑❑❑❑**		68
18.5	21.3	160 L	2935	60	EFF2	90.9	91	0.86	34	**1LE1002-1DA4❑-❑❑❑❑**		78
4-pole – 1500 rpm at 50 Hz, 1800 rpm at 60 Hz												
2.2	2.55	100 L	1425	14.8	EFF2	81	84	0.81	4.85	**1LE1002-1AB4❑-❑❑❑❑**		18
3	3.45	100 L	1425	20.2	EFF2	82.8	83.6	0.85	6.2	**1LE1002-1AB5❑-❑❑❑❑**		22
4	4.6	112 M	1435	27	EFF2	84.2	85.1	0.84	8.2	**1LE1002-1BB2❑-❑❑❑❑**		27
5.5	6.3	132 S	1450	36	EFF2	86	86.5	0.83	11.2	**1LE1002-1CB0❑-❑❑❑❑**		38
7.5	8.6	132 M	1450	49	EFF2	87	87.4	0.83	15	**1LE1002-1CB2❑-❑❑❑❑**		44
11	12.6	160 M	1460	72	EFF2	88.4	88.1	0.82	22	**1LE1002-1DB2❑-❑❑❑❑**		62
15	17.3	160 L	1460	98	EFF2	89.4	89.7	0.82	29.5	**1LE1002-1DB4❑-❑❑❑❑**		73
6-pole – 1000 rpm at 50 Hz, 1200 rpm at 60 Hz												
1.5	1.75	100 L	940	15.3		74	72.6	0.74	3.95	**1LE1002-1AC4❑-❑❑❑❑**		19
2.2	2.55	112 M	930	23		78	78.1	0.77	5.3	**1LE1002-1BC2❑-❑❑❑❑**		25
3	3.45	132 S	955	30		80	79.4	0.74	7.3	**1LE1002-1CC0❑-❑❑❑❑**		34
4	4.6	132 M	950	40		83	83.4	0.76	9.2	**1LE1002-1CC2❑-❑❑❑❑**		39
5.5	6.3	132 M	950	55		85	85.3	0.75	12.4	**1LE1002-1CC3❑-❑❑❑❑**		48
7.5	8.6	160 M	970	75		86	85.4	0.73	17.2	**1LE1002-1DC2❑-❑❑❑❑**		72
11	12.6	160 L	965	110		87.6	87.9	0.77	23.5	**1LE1002-1DC4❑-❑❑❑❑**		92
8-pole – 750 rpm at 50 Hz, 900 rpm at 60 Hz												
0.75	0.86	100 L	705	10.4		65.4	60.2	0.62	2.65	**1LE1002-1AD4❑-❑❑❑❑**		17
1.1	1.3	100 L	705	15.1		68.3	67.6	0.63	3.7	**1LE1002-1AD5❑-❑❑❑❑**		22
1.5	1.75	112 M	700	20		75.9	72.8	0.68	4.2	**1LE1002-1BD2❑-❑❑❑❑**		25
2.2	2.55	132 S	715	29		81	80.4	0.66	5.9	**1LE1002-1CD0❑-❑❑❑❑**		37
3	3.45	132 M	710	40		81.6	81.4	0.68	7.8	**1LE1002-1CD2❑-❑❑❑❑**		44
4	4.6	160 M	720	53		80	78.7	0.69	10.4	**1LE1002-1DD2❑-❑❑❑❑**		60
5.5	6.3	160 M	720	73		83.5	83.9	0.70	13.6	**1LE1002-1DD3❑-❑❑❑❑**		72
7.5	8.6	160 L	715	100		83.5	84.7	0.70	18.6	**1LE1002-1DD4❑-❑❑❑❑**		91

Note:
The 2-, 4-, and 6-pole motors listed above can be delivered ex stock with shorter delivery time.
These motors can be selected from defined versions (voltages, types of construction, motor protection and position of the connection box) in section “General Line motors with shorter delivery time” on Pages 1/8 to 1/17.

Order No. supplements, see from Page 1/20.

Selection and ordering data (continued)

Order No.	Locked-rotor torque	Locked-rotor current	Breakdown torque	Torque class	Moment of inertia	Noise at rated output	
	with direct starting as multiple of rated					Measuring-surface sound pressure level at 50 Hz	Sound pressure level at 50 Hz
	torque	current	torque				
	T_{LR}/T_{rated}	I_{LR}/I_{rated}	T_B/T_{rated}	CL	J kgm^2	L_{pfA} dB(A)	L_{WA} dB(A)
Motor version: temperature class 155 (F), IP55 degree of protection, used acc. to temperature class 130 (B)							
2-pole – 3000 rpm at 50 Hz, 3600 rpm at 60 Hz							
1LE1002-1AA4❑-❑❑❑❑	3.2	6.2	2.9	16	0.0034	67	79
1LE1002-1BA2❑-❑❑❑❑	2.7	7.3	3.7	16	0.0067	69	81
1LE1002-1CA0❑-❑❑❑❑	2	5.6	2.6	16	0.01267	68	80
1LE1002-1CA1❑-❑❑❑❑	2.2	6.4	3	16	0.01601	68	80
1LE1002-1DA2❑-❑❑❑❑	2.1	6.1	2.7	16	0.02971	70	82
1LE1002-1DA3❑-❑❑❑❑	2.5	6.1	3.2	16	0.03619	70	82
1LE1002-1DA4❑-❑❑❑❑	2.5	7	3.2	16	0.04395	70	82
4-pole – 1500 rpm at 50 Hz, 1800 rpm at 60 Hz							
1LE1002-1AB4❑-❑❑❑❑	2.3	5.1	2.7	16	0.0059	60	72
1LE1002-1AB5❑-❑❑❑❑	2.4	5.4	2.6	16	0.0078	60	72
1LE1002-1BB2❑-❑❑❑❑	2.2	5.3	2.6	16	0.0102	58	70
1LE1002-1CB0❑-❑❑❑❑	2.3	6.2	2.7	16	0.0186	64	76
1LE1002-1CB2❑-❑❑❑❑	2.5	6.6	2.9	16	0.02371	64	76
1LE1002-1DB2❑-❑❑❑❑	2.3	6.4	3.1	16	0.04395	65	77
1LE1002-1DB4❑-❑❑❑❑	2.5	7	3.4	16	0.05616	65	77
6-pole – 1000 rpm at 50 Hz, 1200 rpm at 60 Hz							
1LE1002-1AC4❑-❑❑❑❑	2	4	2.2	16	0.0065	61	73
1LE1002-1BC2❑-❑❑❑❑	2.3	4.1	2.5	16	0.0092	68	80
1LE1002-1CC0❑-❑❑❑❑	2	4.6	2.6	16	0.0167	63	75
1LE1002-1CC2❑-❑❑❑❑	2.1	4.7	2.5	16	0.02116	63	75
1LE1002-1CC3❑-❑❑❑❑	2.5	5.2	2.8	16	0.02734	63	75
1LE1002-1DC2❑-❑❑❑❑	2.1	5.5	2.9	16	0.04993	68	80
1LE1002-1DC4❑-❑❑❑❑	1.9	5.9	2.7	16	0.0678	68	80
8-pole – 750 rpm at 50 Hz, 900 rpm at 60 Hz							
1LE1002-1AD4❑-❑❑❑❑	1.9	3	2.2	16	0.0056	60	72
1LE1002-1AD5❑-❑❑❑❑	2	3.2	2.3	16	0.0078	60	72
1LE1002-1BD2❑-❑❑❑❑	1.9	3.4	2.1	16	0.0094	63	75
1LE1002-1CD0❑-❑❑❑❑	1.7	3.9	2.4	13	0.0186	63	75
1LE1002-1CD2❑-❑❑❑❑	1.8	3.9	2.2	13	0.02372	63	75
1LE1002-1DD2❑-❑❑❑❑	1.7	3.8	2.3	13	0.0439	63	75
1LE1002-1DD3❑-❑❑❑❑	1.6	4	2.2	13	0.0562	63	75
1LE1002-1DD4❑-❑❑❑❑	1.7	3.8	2.2	13	0.0772	63	75

1

Selection and ordering data (continued)

Order No. supplements

Motor type	Frame size	Positions 12 and 13: Voltages (voltage codes)							
		Standard voltages				Further voltages			
		50 Hz				50 Hz			
		230 VΔ/400 VY	400 VΔ/690 VY	500 VY	500 VΔ	220 VΔ/380 VY	380 VΔ/660 VY	415 VY	415 VΔ
		60 Hz				Rated voltage range			
		460 VY	460 VΔ			(210 … 230 VΔ/ 360 … 400 VY) [1]	(360 … 400 VΔ/ 625 … 695 VY) [1]	(395 … 435 VY) [1]	(395 … 435 VΔ) [1]
		see "Selection and ordering data" for outputs at 60 Hz							
		22	**34**	**27**	**40**	**21**	**33**	**23**	**35**
1LE1002-1A..❑-❑...	**100 L**	○	○	○	○	✓	✓	✓	✓
1LE1002-1B..❑-❑...	**112 M**	○	○	○	○	✓	✓	✓	✓
1LE1002-1C..❑-❑...	**132 S/M**	○	○	○	○	✓	✓	✓	✓
1LE1002-1D..❑-❑...	**160 M/L**	○	○	○	○	✓	✓	✓	✓

○ Without additional charge
✓ With additional charge

Order other voltages with voltage code **9** in position 12, code **0** in position 13 and the corresponding order code (see "Special versions" in the "Selection and ordering data" under "Voltages", Page 1/54).

Motor type	Frame size	Position 14: Types of construction (type letter)												
		Without flange							With flange (acc. to DIN EN 50347)					
		IM B3 [2] [3]	IM B6 [3]	IM B7 [3]	IM B8 [3]	IM V6 [3]	IM V5 without protective cover [3]	IM V5 with protective cover [3] [4] [5]	Flange size	IM B5 [3] [6]	IM V1 without protective cover [3]	IM V1 with protective cover [3] [4] [5]	IM V3 [3]	IM B35
		A	**T**	**U**	**V**	**D**	**C**	**C**		**F**	**G**	**G**	**H**	**J**
	Order No. supplement **-Z** with order code	–	–	–	–	–	–	**-Z H00**		–	–	**-Z H00**	–	–
1LE1002-1A...-.❑..	**100 L**	❑	❑	❑	❑	❑	❑	✓	**FF 215**	✓	✓	✓	✓	✓
1LE1002-1B...-.❑..	**112 M**	❑	❑	❑	❑	❑	❑	✓	**FF 215**	✓	✓	✓	✓	✓
1LE1002-1C...-.❑..	**132 S/M**	❑	❑	❑	❑	❑	❑	✓	**FF 265**	✓	✓	✓	✓	✓
1LE1002-1D...-.❑..	**160 M/L**	❑	❑	❑	❑	❑	❑	✓	**FF 300**	✓	✓	✓	✓	✓

Motor type	Frame size	Position 14: Types of construction (type letter)												
		With standard flange (acc. to DIN EN 50347)							With standard flange (next larger standerd flange acc. to DIN EN 50347)					
		Flange size	IM B14 [3] [7]	IM V19 [3]	IM V18 without protective cover [3]	IM V18 with protective cover [3] [4] [5]	IM B34		Flange size	IM B14 [3] [7]	IM V19 [3]	IM V18 without protective cover [3]	IM V18 with protective cover [3] [4] [5]	IM B34
			K	**L**	**M**	**M**	**N**			**K**	**L**	**M**	**M**	**N**
	Order No.supplement **-Z** with order code		–	–	–	**-Z H00**	–			**-Z P01**	**-Z P01**	**-Z P01**	**-Z H00 P01**	**-Z P01**
1LE1002-1A...-.❑..	**100 L**	**FT 130**	✓	✓	✓	✓	✓		**FT 165**	✓	✓	✓	✓	✓
1LE1002-1B...-.❑..	**112 M**	**FT 130**	✓	✓	✓	✓	✓		**FT 165**	✓	✓	✓	✓	✓
1LE1002-1C...-.❑..	**132 S/M**	**FT 165**	✓	✓	✓	✓	✓		**FT 215**	✓	✓	✓	✓	✓
1LE1002-1D...-.❑..	**160 M/L**	**FT 215**	✓	✓	✓	✓	✓		–	–	–	–	–	–

❑ Standard version
✓ With additional charge

1) A rated voltage range is also specified on the rating plate.

2) The types of construction IM B6/7/8, IM V6 and IM V5 without protective cover/with protective cover are also possible as long as no condensation drainage holes (order code **H03**) and no stamping of these types of construction on the rating plate are required. As standard, the type of construction IM B3 is then stamped on the rating plate. With type of construction IM V5 with protective cover, the protective cover has to be additionally ordered with order code **H00**. The protective cover is not stamped on the rating plate.

3) The type of construction is stamped on the rating plate. When ordering with condensation drainage holes (order code **H03**), it is absolutely necessary to specify the type of construction for the exact position of the condensation drainage holes during manufacture.

4) Option second shaft extension (order code **L05**) not possible.

5) In combination with an encoder, it is not necessary to order the protective cover (order code **H00**), as this is delivered as a protection for the encoder as standard. In this case, the protective cover is standard design (without additional charge).

6) The types of construction IM V3 and IM V1 without protective cover/with protective cover are also possible as long as no condensation drainage holes (order code **H03**) and no stamping of these types of construction on the rating plate are required. As standard, the type of construction IM B5 is then stamped on the rating plate. With type of construction IM V1 with protective cover, the protective cover has to be additionally ordered with order code **H00**. The protective cover is not stamped on the rating plate.

7) The types of construction IM V19 and IM V18 without protective cover/with protective cover are also possible as long as no condensation drainage holes (order code **H03**) and no stamping of these types of construction on the rating plate are required. As standard, the type of construction IM B14 is then stamped on the rating plate. With type of construction IM V18 with protective cover, the protective cover has to be additionally ordered with order code **H00**. The protective cover is not stamped on the rating plate.

Selection and ordering data (continued)

Motor type	Frame size	Position 15: Motor protection (motor protection letter)					
		Without motor protection	Motor protection with PTC thermistors with 3 embedded temperature sensors for tripping [1]	Motor protection with PTC thermistors with 6 embedded temperature sensors for alarm and tripping [1]	Motor temperature detection with embedded temperature sensor KTY 84-130 [1]	NTC thermistors for tripping	Temperature detectors for tripping [1]
		A	**B**	**C**	**F**	**Z**	**Z**
	Order code					**Q2A**	**Q3A**
1LE1002-1A...-..□.	**100 L**	□	✓	✓	✓	✓	✓
1LE1002-1B...-..□.	**112 M**	□	✓	✓	✓	✓	✓
1LE1002-1C...-..□.	**132 S/M**	□	✓	✓	✓	✓	✓
1LE1002-1D...-..□.	**160 M/L**	□	✓	✓	✓	✓	✓

□ Standard version
✓ With additional charge

Motortyp	Frame size	Position 16: Connection box (connection box code)			
		Connection box top [2]	Connection box on RHS [3]	Connection box on LHS [3]	Connection box bottom [3]
		4	**5**	**6**	**7**
1LE1002-1A...-...□	**100 L**	□	✓	✓	✓
1LE1002-1B...-...□	**112 M**	□	✓	✓	✓
1LE1002-1C...-...□	**132 S/M**	□	✓	✓	✓
1LE1002-1D...-...□	**160 M/L**	□	✓	✓	✓

□ Standard version
✓ With additional charge

[1] Evaluation with appropriate tripping unit (see Catalog LV 1) is recommended.

[2] With type of construction, cast feet as standard. Screwed-on feet are available with order code **H01**, see "Special versions".

[3] With type of construction, screwed-on feet as standard.

Self-ventilated energy-saving motors with high efficiency

Selection and ordering data

Rated output at 50 Hz P_{rated} kW	Rated output at 60 Hz P_{rated} kW	Frame size FS	Operating values at rated output: Rated speed at 50 Hz n_{rated} rpm	Rated torque at 50 Hz T_{rated} Nm	Efficiency Class according to CEMEP EFF1	Efficiency at 50 Hz 4/4-load η_{rated} %	Efficiency at 50 Hz 3/4-load η_{rated} %	Power factor at 50 Hz 4/4-load $\cos\varphi_{rated}$	Rated current at 400 V, 50 Hz I_{rated} A	Order No. For Order No. supplements for voltage, type of construction, motor protection and connection box, see table from Page 1/24.	Price IM B3 type of construction	Weight IM B3 type of construction approx. m kg
Motor version: temperature class 155 (F), IP55 degree of protection, used acc. to temperature class 130 (B)												
For use according to CEMEP												
2-pole – 3000 rpm at 50 Hz, 3600 rpm at 60 Hz												
3	3.45	100 L	2905	9.9	EFF1	86.7	87.5	0.84	5.9	**1LE1001-1AA4❑-❑❑❑❑**		21
4	4.6	112 M	2950	13	EFF1	88	88.5	0.86	7.4	**1LE1001-1BA2❑-❑❑❑❑**		27
5.5	6.3	132 S	2950	18	EFF1	89.5	90.6	0.87	10.2	**1LE1001-1CA0❑-❑❑❑❑**		39
7.5	8.6	132 S	2950	24	EFF1	90	91	0.87	13.8	**1LE1001-1CA1❑-❑❑❑❑**		43
11	12.6	160 M	2955	36	EFF1	90.8	91	0.87	20	**1LE1001-1DA2❑-❑❑❑❑**		67
15	17.3	160 M	2955	48	EFF1	91.4	91.5	0.88	27	**1LE1001-1DA3❑-❑❑❑❑**		75
18.5	21.3	160 L	2955	60	EFF1	92	92.5	0.88	33	**1LE1001-1DA4❑-❑❑❑❑**		84
4-pole – 1500 rpm at 50 Hz, 1800 rpm at 60 Hz												
2.2	2.55	100 L	1455	14	EFF1	86.4	87	0.81	4.55	**1LE1001-1AB4❑-❑❑❑❑**		21
3	3.45	100 L	1455	20	EFF1	87.4	88	0.82	6	**1LE1001-1AB5❑-❑❑❑❑**		25
4	4.6	112 M	1460	26	EFF1	88.3	88.5	0.81	8.1	**1LE1001-1BB2❑-❑❑❑❑**		29
5.5	6.3	132 S	1465	36	EFF1	89.2	89.5	0.80	11.2	**1LE1001-1CB0❑-❑❑❑❑**		42
7.5	8.6	132 M	1465	49	EFF1	90.1	91	0.83	14.4	**1LE1001-1CB2❑-❑❑❑❑**		49
11	12.6	160 M	1470	71	EFF1	91.2	91.8	0.85	20.5	**1LE1001-1DB2❑-❑❑❑❑**		71
15	17.3	160 L	1475	97	EFF1	92	92.4	0.85	27.5	**1LE1001-1DB4❑-❑❑❑❑**		83
6-pole – 1000 rpm at 50 Hz, 1200 rpm at 60 Hz												
1.5	1.75	100 L	970	15		84.5	84.5	0.73	3.5	**1LE1001-1AC4❑-❑❑❑❑**		25
2.2	2.55	112 M	965	22		85	85	0.75	5	**1LE1001-1BC2❑-❑❑❑❑**		29
3	3.45	132 S	970	30		85	85	0.74	6.9	**1LE1001-1CC0❑-❑❑❑❑**		38
4	4.6	132 M	970	39		86	86	0.78	8.6	**1LE1001-1CC2❑-❑❑❑❑**		43
5.5	6.3	132 M	970	54		88	88	0.77	11.8	**1LE1001-1CC3❑-❑❑❑❑**		52
7.5	8.6	160 M	975	73		89	89	0.77	15.8	**1LE1001-1DC2❑-❑❑❑❑**		77
11	12.6	160 L	975	108		89.5	89	0.80	22	**1LE1001-1DC4❑-❑❑❑❑**		93
8-pole – 750 rpm at 50 Hz, 900 rpm at 60 Hz												
0.75	0.86	100 L	725	9.9		68	65	0.58	2.75	**1LE1001-1AD4❑-❑❑❑❑**		21
1.1	1.3	100 L	725	14		68	64.5	0.58	4.05	**1LE1001-1AD5❑-❑❑❑❑**		25
1.5	1.75	112 M	720	20		77	75.5	0.67	4.2	**1LE1001-1BD2❑-❑❑❑❑**		29
2.2	2.55	132 S	725	29		77.5	76.7	0.63	6.5	**1LE1001-1CD0❑-❑❑❑❑**		41
3	3.45	132 M	730	40		84	82	0.65	7.9	**1LE1001-1CD2❑-❑❑❑❑**		49
4	4.6	160 M	730	52		87	88	0.69	9.6	**1LE1001-1DD2❑-❑❑❑❑**		69
5.5	6.3	160 M	735	72		87.5	89	0.69	13.2	**1LE1001-1DD3❑-❑❑❑❑**		82
7.5	8.6	160 L	730	98		88	89	0.72	17	**1LE1001-1DD4❑-❑❑❑❑**		94

Order No. supplements, see from Page 1/24.

Selection and ordering data (continued)

Order No.	Locked-rotor torque	Locked-rotor current	Breakdown torque	Torque class	Moment of inertia	Noise at rated output	
	with direct starting as multiple of rated					Measuring-surface sound pressure level at 50 Hz	Sound pressure level at 50 Hz
	torque	current	torque				
	T_{LR}/T_{rated}	I_{LR}/I_{rated}	T_B/T_{rated}	CL	J kgm^2	L_{pfA} dB(A)	L_{WA} dB(A)
Motor version: temperature class 155 (F), IP55 degree of protection, used acc. to temperature class 130 (B)							
For use according to CEMEP							
2-pole – 3000 rpm at 50 Hz, 3600 rpm at 60 Hz							
1LE1001-1AA4❑-❑❑❑❑	2.3	7	3.3	16	0.0044	67	79
1LE1001-1BA2❑-❑❑❑❑	2.4	7.4	3.3	16	0.0092	69	81
1LE1001-1CA0❑-❑❑❑❑	1.8	6.7	2.9	16	0.02012	68	80
1LE1001-1CA1❑-❑❑❑❑	2.2	7.5	3.1	16	0.02353	68	80
1LE1001-1DA2❑-❑❑❑❑	2.1	7.4	3.2	16	0.04471	70	82
1LE1001-1DA3❑-❑❑❑❑	2.4	7.6	3.4	16	0.05277	70	82
1LE1001-1DA4❑-❑❑❑❑	2.9	7.9	3.6	16	0.06085	70	82
4-pole – 1500 rpm at 50 Hz, 1800 rpm at 60 Hz							
1LE1001-1AB4❑-❑❑❑❑	2.1	6.9	3.3	16	0.0086	60	72
1LE1001-1AB5❑-❑❑❑❑	2	6.9	3.1	16	0.0109	60	72
1LE1001-1BB2❑-❑❑❑❑	2.5	7.1	3.2	16	0.014	58	70
1LE1001-1CB0❑-❑❑❑❑	2.3	6.9	2.9	16	0.02698	64	76
1LE1001-1CB2❑-❑❑❑❑	2.3	6.9	2.9	16	0.03353	64	76
1LE1001-1DB2❑-❑❑❑❑	2.2	6.7	2.8	16	0.06495	65	77
1LE1001-1DB4❑-❑❑❑❑	2.5	7.3	3	16	0.08281	65	77
6-pole – 1000 rpm at 50 Hz, 1200 rpm at 60 Hz							
1LE1001-1AC4❑-❑❑❑❑	2	6.2	2.9	16	0.0113	59	71
1LE1001-1BC2❑-❑❑❑❑	2.1	6	3.1	16	0.0139	57	69
1LE1001-1CC0❑-❑❑❑❑	1.6	5.6	2.6	13	0.02371	63	75
1LE1001-1CC2❑-❑❑❑❑	1.6	5.6	2.5	13	0.02918	63	75
1LE1001-1CC3❑-❑❑❑❑	1.9	6.1	2.8	16	0.03673	63	75
1LE1001-1DC2❑-❑❑❑❑	1.8	6.3	2.8	16	0.0754	67	79
1LE1001-1DC4❑-❑❑❑❑	1.7	6.2	2.7	16	0.0975	67	79
8-pole – 750 rpm at 50 Hz, 900 rpm at 60 Hz							
1LE1001-1AD4❑-❑❑❑❑	1.6	4	2.8	13	0.0086	60	72
1LE1001-1AD5❑-❑❑❑❑	1.8	4	2.8	13	0.0109	60	72
1LE1001-1BD2❑-❑❑❑❑	1.4	4.2	2.4	13	0.014	63	75
1LE1001-1CD0❑-❑❑❑❑	1.4	3.6	1.8	10	0.02698	63	75
1LE1001-1CD2❑-❑❑❑❑	1.4	5	2.4	10	0.03463	63	75
1LE1001-1DD2❑-❑❑❑❑	1.8	4.3	2	13	0.0649	63	75
1LE1001-1DD3❑-❑❑❑❑	2.1	4.4	2.1	13	0.0828	63	75
1LE1001-1DD4❑-❑❑❑❑	1.9	4.5	2.1	13	0.0982	63	75

1

Selection and ordering data (continued)

Order No. supplements

Motor type	Frame size	Positions 12 and 13: Voltages (voltage codes)							
		Standard voltages				Further voltages			
		50 Hz				50 Hz			
		230 VΔ/400 VY	400 VΔ/690 VY	500 VY	500 VΔ	220 VΔ/380 VY	380 VΔ/660 VY	415 VY	415 VΔ
		60 Hz				Rated voltage range			
		460 VY	460 VΔ			(210 … 230 VΔ/ 360 … 400 VY) [1]	(360 … 400 VΔ/ 625 … 695 VY) [1]	(395 … 435 VY) [1]	(395 … 435 VΔ) [1]
		see "Selection and ordering data" for outputs at 60 Hz							
		22	**34**	**27**	**40**	**21**	**33**	**23**	**35**
1LE1001-1A..❑-❑...	**100 L**	○	○	○	○	✓	✓	✓	✓
1LE1001-1B..❑-❑...	**112 M**	○	○	○	○	✓	✓	✓	✓
1LE1001-1C..❑-❑...	**132 S/M**	○	○	○	○	✓	✓	✓	✓
1LE1001-1D..❑-❑...	**160 M/L**	○	○	○	○	✓	✓	✓	✓

○ Without additional charge
✓ With additional charge

Order other voltages with voltage code **9** in position 12, code **0** in position 13 and the corresponding order code (see "Special versions" in the "Selection and ordering data" under "Voltages", Page 1/54).

Motor type	Frame size	Position 14: Types of construction (type letter)												
		Without flange							With flange (acc. to DIN EN 50347)					
		IM B3 [2] [3]	IM B6 [3]	IM B7 [3]	IM B8 [3]	IM V6 [3]	IM V5 without protective cover [3]	IM V5 with protective cover [3] [4] [5]	Flange size	IM B5 [3] [6]	IM V1 without protective cover [3]	IM V1 with protective cover [3] [4] [5]	IM V3 [3]	IM B35
		A	**T**	**U**	**V**	**D**	**C**	**C**		**F**	**G**	**G**	**H**	**J**
	Order No. supplement **-Z** with order code	–	–	–	–	–	–	**-Z H00**		–	–	**-Z H00**	–	–
1LE1001-1A...-.❑..	**100 L**	❑	❑	❑	❑	❑	❑	✓	**FF 215**	✓	✓	✓	✓	✓
1LE1001-1B...-.❑..	**112 M**	❑	❑	❑	❑	❑	❑	✓	**FF 215**	✓	✓	✓	✓	✓
1LE1001-1C...-.❑..	**132 S/M**	❑	❑	❑	❑	❑	❑	✓	**FF 265**	✓	✓	✓	✓	✓
1LE1001-1D...-.❑..	**160 M/L**	❑	❑	❑	❑	❑	❑	✓	**FF 300**	✓	✓	✓	✓	✓

Motor type	Frame size	Position 14: Types of construction (type letter)											
		With standard flange (acc. to DIN EN 50347)						With standard flange (next larger standerd flange acc. to DIN EN 50347)					
		Flange size	IM B14 [3] [7]	IM V19 [3]	IM V18 without protective cover [3]	IM V18 with protective cover [3] [4] [5]	IM B34	Flange size	IM B14 [3] [7]	IM V19 [3]	IM V18 without protective cover [3]	IM V18 with protective cover [3] [4] [5]	IM B34
			K	**L**	**M**	**M**	**N**		**K**	**L**	**M**	**M**	**N**
	Order No. supplement **-Z** with order code		–	–	–	**-Z H00**	–		**-Z P01**	**-Z P01**	**-Z P01**	**-Z H00 P01**	**-Z P01**
1LE1001-1A...-.❑..	**100 L**	**FT 130**	✓	✓	✓	✓	✓	**FT 165**	✓	✓	✓	✓	✓
1LE1001-1B...-.❑..	**112 M**	**FT 130**	✓	✓	✓	✓	✓	**FT 165**	✓	✓	✓	✓	✓
1LE1001-1C...-.❑..	**132 S/M**	**FT 165**	✓	✓	✓	✓	✓	**FT 215**	✓	✓	✓	✓	✓
1LE1001-1D...-.❑..	**160 M/L**	**FT 215**	✓	✓	✓	✓	✓	–	–	–	–	–	–

❑ Standard version
✓ With additional charge

1) A rated voltage range is also specified on the rating plate.

2) The types of construction IM B6/7/8, IM V6 and IM V5 without protective cover/with protective cover are also possible as long as no condensation drainage holes (order code **H03**) and no stamping of these types of construction on the rating plate are required. As standard, the type of construction IM B3 is then stamped on the rating plate. With type of construction IM V5 with protective cover, the protective cover has to be additionally ordered with order code **H00**. The protective cover is not stamped on the rating plate.

3) The type of construction is stamped on the rating plate. When ordering with condensation drainage holes (order code **H03**), it is absolutely necessary to specify the type of construction for the exact position of the condensation drainage holes during manufacture.

4) Option second shaft extension (order code **L05**) not possible.

5) In combination with an encoder, it is not necessary to order the protective cover (order code **H00**), as this is delivered as a protection for the encoder as standard. In this case, the protective cover is standard design (without additional charge).

6) The types of construction IM V3 and IM V1 without protective cover/with protective cover are also possible as long as no condensation drainage holes (order code **H03**) and no stamping of these types of construction on the rating plate are required. As standard, the type of construction IM B5 is then stamped on the rating plate. With type of construction IM V1 with protective cover, the protective cover has to be additionally ordered with order code **H00**. The protective cover is not stamped on the rating plate.

7) The types of construction IM V19 and IM V18 without protective cover/with protective cover are also possible as long as no condensation drainage holes (order code **H03**) and no stamping of these types of construction on the rating plate are required. As standard, the type of construction IM B14 is then stamped on the rating plate. With type of construction IM V18 with protective cover, the protective cover has to be additionally ordered with order code **H00**. The protective cover is not stamped on the rating plate.

Selection and ordering data (continued)

Motor type	Frame size	Position 15: Motor protection (motor protection letter)					
		Without motor protection	Motor protection with PTC thermistors with 3 embedded temperature sensors for tripping [1]	Motor protection with PTC thermistors with 6 embedded temperature sensors for alarm and tripping [1]	Motor temperature detection with embedded temperature sensor KTY 84-130 [1]	NTC thermistors for tripping	Temperature detectors for tripping [1]
		A	**B**	**C**	**F**	**Z**	**Z**
	Order code					**Q2A**	**Q3A**
1LE1001-1A...-..❑.	**100 L**	◻	✓	✓	✓	✓	✓
1LE1001-1B...-..❑.	**112 M**	◻	✓	✓	✓	✓	✓
1LE1001-1C...-..❑.	**132 S/M**	◻	✓	✓	✓	✓	✓
1LE1001-1D...-..❑.	**160 M/L**	◻	✓	✓	✓	✓	✓

◻ Standard version
✓ With additional charge

Motor type	Frame size	Position 16: Connection box (connection box code)			
		Connection box top [2]	Connection box on RHS [3]	Connection box on LHS [3]	Connection box bottom [3]
		4	**5**	**6**	**7**
1LE1001-1A...-...❑	**100 L**	◻	✓	✓	✓
1LE1001-1B...-...❑	**112 M**	◻	✓	✓	✓
1LE1001-1C...-...❑	**132 S/M**	◻	✓	✓	✓
1LE1001-1D...-...❑	**160 M/L**	◻	✓	✓	✓

◻ Standard version
✓ With additional charge

[1] Evaluation with appropriate tripping unit (see Catalog LV 1) is recommended.

[2] With type of construction, cast feet as standard. Screwed-on feet are available with order code **H01**, see "Special versions".

[3] With type of construction, screwed-on feet as standard.

Selection and ordering data (continued)

Rated output at 50 Hz P_{rated} kW	Rated output at 60 Hz P_{rated} HP	Frame size FS	Operating values at rated output: Rated speed at 60 Hz n_{rated} rpm	Rated torque at 60 Hz T_{rated} Nm	EPACT with CC-No. CCxxx	Nominal efficiency at 60 Hz η_{rated} %	Power factor at 60 Hz 4/4-load $\cos\varphi_{rated}$	Rated current at 460 V, 60 Hz I_{rated} A	Order No. For Order No. supplements for voltage, type of construction, motor protection and connection box, see from Page 1/28	Price IM B3 type of construction	Weight IM B3 type of construction approx. m kg
Motor version: temperature class 155 (F), IP55 degree of protection, used acc. to temperature class 130 (B)											
For use in the North American market according to EPACT											
2-pole – 3600 rpm at 60 Hz											
3	4	100 L	3520	8.1	A. S.	86.5	0.83	5.2	**1LE1001-1AA4❑-❑❑❑❑**		21
4	5	112 M	3565	9.9	A. S.	87.5	0.84	6.3	**1LE1001-1BA2❑-❑❑❑❑**		27
5.5	7.5	132 S	3560	15	A. S.	89.5	0.86	9	**1LE1001-1CA0❑-❑❑❑❑**		39
7.5	10	132 S	3560	20	A. S.	90.2	0.87	12	**1LE1001-1CA1❑-❑❑❑❑**		43
11	15	160 M	3560	30	A. S.	90.2	0.86	17.8	**1LE1001-1DA2❑-❑❑❑❑**		67
15	20	160 M	3565	40	A. S.	91	0.87	24	**1LE1001-1DA3❑-❑❑❑❑**		75
18.5	25	160 L	3565	50	A. S.	91.7	0.87	29	**1LE1001-1DA4❑-❑❑❑❑**		84
4-pole – 1800 rpm at 60 Hz											
2.2	3	100 L	1760	12	A. S.	87.5	0.78	4.05	**1LE1001-1AB4❑-❑❑❑❑**		21
3	4	100 L	1765	16	A. S.	87.5	0.79	5.4	**1LE1001-1AB5❑-❑❑❑❑**		25
4	5	112 M	1770	20	A. S.	88.5	0.77	6.8	**1LE1001-1BB2❑-❑❑❑❑**		29
5.5	7.5	132 S	1770	30	A. S.	89.5	0.78	9.9	**1LE1001-1CB0❑-❑❑❑❑**		42
7.5	10	132 M	1770	40	A. S.	89.5	0.82	12.8	**1LE1001-1CB2❑-❑❑❑❑**		49
11	15	160 M	1775	59	A. S.	91	0.84	18.1	**1LE1001-1DB2❑-❑❑❑❑**		71
15	20	160 L	1780	80	A. S.	91.7	0.84	24.5	**1LE1001-1DB4❑-❑❑❑❑**		83
6-pole – 1200 rpm at 60 Hz											
1.5	2	100 L	1175	12	A. S.	86.5	0.69	3.15	**1LE1001-1AC4❑-❑❑❑❑**		25
2.2	3	112 M	1170	18	A. S.	87.5	0.73	4.3	**1LE1001-1BC2❑-❑❑❑❑**		29
3	4	132 S	1175	24	A. S.	87.5	0.7	6.1	**1LE1001-1CC0❑-❑❑❑❑**		38
4	5	132 M	1180	30	A. S.	87.5	0.73	7.3	**1LE1001-1CC2❑-❑❑❑❑**		43
5.5	7.5	132 M	1175	45	A. S.	89.5	0.74	10.4	**1LE1001-1CC3❑-❑❑❑❑**		52
7.5	10	160 M	1180	61	A. S.	89.5	0.74	14.2	**1LE1001-1DC2❑-❑❑❑❑**		77
11	15	160 L	1180	89	A. S.	90.2	0.78	19.6	**1LE1001-1DC4❑-❑❑❑❑**		93

A. S. Available soon

Order No. supplements, see from Page 1/28.

Selection and ordering data (continued)

Order No.	Locked-rotor torque	Locked-rotor current	Breaddown torque	Torque class	Moment of inertia	Noise at rated output	
	with direct starting	as multiple of rated					
	torque	current	torque			Measuring-surface sound pressure level at 60 Hz	Sound pressure level at 60 Hz
	T_{LR}/T_{rated}	I_{LR}/I_{rated}	T_B/T_{rated}	CL	J kgm^2	L_{pfA} dB(A)	L_{WA} dB(A)
Motor version: temperature class 155 (F), IP55 degree of protection, used acc. to temperature class 130 (B)							
For use in the North American market according to EPACT							
2-pole – 3600 rpm at 60 Hz							
1LE1001-1AA4❑-❑❑❑❑	2.56	7.3	3.83	16	0.0044	71	83
1LE1001-1BA2❑-❑❑❑❑	2.9	7.8	4	16	0.0092	73	85
1LE1001-1CA0❑-❑❑❑❑	2.04	6.9	3.3	16	0.02012	72	84
1LE1001-1CA1❑-❑❑❑❑	2.3	7.4	3.56	16	0.02353	72	84
1LE1001-1DA2❑-❑❑❑❑	2.38	7.4	3.63	16	0.04471	77	89
1LE1001-1DA3❑-❑❑❑❑	2.76	7.6	3.91	16	0.05277	77	89
1LE1001-1DA4❑-❑❑❑❑	3.31	7.9	4.1	16	0.06085	77	89
4-pole – 1800 rpm at 60 Hz							
1LE1001-1AB4❑-❑❑❑❑	2.45	7.3	3.85	16	0.0086	62	74
1LE1001-1AB5❑-❑❑❑❑	2.38	7.5	3.68	16	0.0109	62	74
1LE1001-1BB2❑-❑❑❑❑	3	7.5	4	16	0.014	62	74
1LE1001-1CB0❑-❑❑❑❑	2.61	7.3	3.29	16	0.02698	68	80
1LE1001-1CB2❑-❑❑❑❑	2.7	7.1	3.407	16	0.03353	68	80
1LE1001-1DB2❑-❑❑❑❑	2.65	7	3.22	16	0.06495	69	81
1LE1001-1DB4❑-❑❑❑❑	2.79	7.7	3.37	16	0.08281	69	81
6-pole – 1200 rpm at 60 Hz							
1LE1001-1AC4❑-❑❑❑❑	2.33	6.4	3.38	16	0.0113	62	74
1LE1001-1BC2❑-❑❑❑❑	2.3	6.5	3.4	16	0.0139	60	72
1LE1001-1CC0❑-❑❑❑❑	1.75	5.8	3.03	13	0.02371	67	79
1LE1001-1CC2❑-❑❑❑❑	2.08	5.8	3.166	13	0.02918	67	79
1LE1001-1CC3❑-❑❑❑❑	2.04	6.3	3.17	16	0.03673	67	79
1LE1001-1DC2❑-❑❑❑❑	1.95	6.3	3.213	16	0.0754	70	82
1LE1001-1DC4❑-❑❑❑❑	1.834	6.2	2.98	16	0.0975	70	82

Selection and ordering data (continued)

Order No. supplements

Motor type	Frame size	Positions 12 and 13: Voltages (voltage codes)	
		Standard voltages	
		60 Hz	
		460 VY	460 VΔ
		see "Selection and ordering data" for outputs at 60 Hz	
		22	**34**
1LE1001-1A..❑-❑...	**100 L**	○	○
1LE1001-1B..❑-❑...	**112 M**	○	○
1LE1001-1C..❑-❑...	**132 S/M**	○	○
1LE1001-1D..❑-❑...	**160 M/L**	○	○

○ Without additional charge
✓ With additional charge

Order other voltages with voltage code **9** in position 12, code **0** in position 13 and the corresponding order code (see "Special versions" in the "Selection and ordering data" under "Voltages", Page 1/54).

Motor type	Frame size	Position 14: Type of construction (type letter)												
		With flange							**With flange (acc. to DIN EN 50347)**					
		IM B3 1) 2)	IM B6 2)	IM B7 2)	IM B8 2)	IM V6 2)	IM V5 without protection cover 2)	IM V5 with protection cover 2) 3) 4)	Flange size	IM B5 2) 5)	IM V1 without protection cover 2)	IM V1 with protection cover 2) 3) 4)	IM V3 2)	IM B35
		A	**T**	**U**	**V**	**D**	**C**	**C**		**F**	**G**	**G**	**H**	**J**
	Order No. supplement **-Z** with order code	–	–	–	–	–	–	**-Z H00**		–	–	**-Z H00**	–	–
1LE1001-1A...-.❑..	**100 L**	❑	❑	❑	❑	❑	❑	✓	**FF 215**	✓	✓	✓	✓	✓
1LE1001-1B...-.❑..	**112 M**	❑	❑	❑	❑	❑	❑	✓	**FF 215**	✓	✓	✓	✓	✓
1LE1001-1C...-.❑..	**132 S/M**	❑	❑	❑	❑	❑	❑	✓	**FF 265**	✓	✓	✓	✓	✓
1LE1001-1D...-.❑..	**160 M/L**	❑	❑	❑	❑	❑	❑	✓	**FF 300**	✓	✓	✓	✓	✓

Motor type	Frame size	Position 14: Type of construction (type letter)											
		With standard flange (acc. to DIN EN 50347)						**With standard flange (next larger standerd flange acc. to DIN EN 50347)**					
		Flange size	IM B14 2) 6)	IM V19 2)	IM V18 without protective cover 2)	IM V18 with protective cover 2) 3) 4)	IM B34	Flange size	IM B14 2) 6)	IM V19 2)	IM V18 without protective cover 2)	IM V18 with protective 2) 3) 4)	IM B34
			K	**L**	**M**	**M**	**N**		**K**	**L**	**M**	**M**	**N**
	Order No. supplement **-Z** with order code		–	–	–	**-Z H00**	–		**-Z P01**	**-Z P01**	**-Z P01**	**-Z H00 P01**	**-Z P01**
1LE1001-1A...-.❑..	**100 L**	**FT 130**	✓	✓	✓	✓	✓	**FT 165**	✓	✓	✓	✓	✓
1LE1001-1B...-.❑..	**112 M**	**FT 130**	✓	✓	✓	✓	✓	**FT 165**	✓	✓	✓	✓	✓
1LE1001-1C...-.❑..	**132 S/M**	**FT 165**	✓	✓	✓	✓	✓	**FT 215**	✓	✓	✓	✓	✓
1LE1001-1D...-.❑..	**160 M/L**	**FT 215**	✓	✓	✓	✓	✓	–	–	–	–	–	–

❑ Standard version
✓ With additional charge

1) The types of construction IM B6/7/8, IM V6 and IM V5 without protective cover/with protective cover are also possible as long as no condensation drainage holes (order code **H03**) and no stamping of these types of construction on the rating plate are required. As standard, the type of construction IM B3 is then stamped on the rating plate. With type of construction IM V5 with protective cover, the protective cover has to be additionally ordered with order code **H00**. The protective cover is not stamped on the rating plate.

2) The type of construction is stamped on the rating plate. When ordering with condensation drainage holes (order code **H03**), it is absolutely necessary to specify the type of construction for the exact position of the condensation drainage holes during manufacture.

3) Option second shaft extension (order code **L05**) not possible

4) In combination with an encoder, it is not necessary to order the protective cover (order code **H00**), as this is delivered as a protection for the encoder as standard. In this case, the protective cover is standard design (without additional charge).

5) The types of construction IM V3 and IM V1 without protective cover/with protective cover are also possible as long as no condensation drainage holes (order code **H03**) and no stamping of these types of construction on the rating plate are required. As standard, the type of construction IM B5 is then stamped on the rating plate. With type of construction IM V1 with protective cover, the protective cover has to be additionally ordered with order code **H00**. The protective cover is not stamped on the rating plate.

6) The types of construction IM V19 and IM V18 without protective cover/with protective cover are also possible as long as no condensation drainage holes (order code **H03**) and no stamping of these types of construction on the rating plate are required. As standard, the type of construction IM B14 is then stamped on the rating plate. With type of construction IM V18 with protective cover, the protective cover has to be additionally ordered with order code **H00**. The protective cover is not stamped on the rating plate.

Selection and ordering data (continued)

Motor type	Frame size	Position 15: Motor protection (motor protection letter)					
		Without motor protection	Motor protection with PTC thermistors with 3 embedded temperature sensors for tripping [1]	Motor protection with PTC thermistors with 6 embedded temperature sensors for alarm and tripping [1]	Motor temperature detection with embedded temperature sensor KTY 84-130 [1]	NTC thermistors for tripping	Temperature detectors for tripping [1]
		A	**B**	**C**	**F**	**Z**	**Z**
	Order code					**Q2A**	**Q3A**
1LE1001-1A...-..❑.	**100 L**	❑	✓	✓	✓	✓	✓
1LE1001-1B...-..❑.	**112 M**	❑	✓	✓	✓	✓	✓
1LE1001-1C...-..❑.	**132 S/M**	❑	✓	✓	✓	✓	✓
1LE1001-1D...-..❑.	**160 M/L**	❑	✓	✓	✓	✓	✓

❑ Standard version
✓ With additional charge

Motor type	Frame size	Position 16: Connection box (connection box code)			
		Connection box top [2]	Connection box on RHS [3]	Connection box on LHS [3]	Connection box bottom [3]
		4	**5**	**6**	**7**
1LE1001-1A...-...❑	**100 L**	❑	✓	✓	✓
1LE1001-1B...-...❑	**112 M**	❑	✓	✓	✓
1LE1001-1C...-...❑	**132 S/M**	❑	✓	✓	✓
1LE1001-1D...-...❑	**160 M/L**	❑	✓	✓	✓

❑ Standard version
✓ With additional charge

[1] Evaluation with appropriate tripping unit (see Catalog LV 1) is recommended.

[2] With type of construction, cast feet as standard. Screwed-on feet are available with order code **H01**, see “Special versions”.

[3] With type of construction, screwed-on feet as standard.

Self-ventilated motors with increased output and improved efficiency

Selection and ordering data

Rated output at 50 Hz P_{rated} kW	Rated output at 60 Hz P_{rated} kW	Frame size FS	Operating values at rated output: Rated speed at 50 Hz n_{rated} rpm	Rated torque at 50 Hz T_{rated} Nm	Efficiency Class according to CEMEP EFF2	Efficiency at 50 Hz 4/4-load η_{rated} %	Efficiency at 50 Hz 3/4-load η_{rated} %	Power factor at 50 Hz 4/4-load $\cos\varphi_{rated}$	Rated current at 400 V, 50 Hz I_{rated} A	Order No. For Order No. supplements for voltage, type of construction, motor protection and connection box, see table from Page 1/32.	Price IM B3 type of construction	Weight IM B3 type of construction approx. m kg
Motor version: temperature class 155 (F), IP55 degree of protection, with increased output, used acc. to temperature class 130 (B) [1]												
2-pole – 3000 rpm at 50 Hz, 3600 rpm at 60 Hz												
4	4.6	100 L	2850	13.3	EFF2	85.6	86.2	0.85	7.9	**1LE1002-1AA6❑-❑❑❑❑**		25
5.5	6.3	112 M	2935	18	EFF2	87	85.5	0.86	10.6	**1LE1002-1BA6❑-❑❑❑❑**		31
11	12.6	132 M	2920	36	EFF2	90	90.7	0.90	19.6	**1LE1002-1CA6❑-❑❑❑❑**		53
22	24.5	160 L	2930	72	EFF2	91.6	91.4	0.88	39.5	**1LE1002-1DA6❑-❑❑❑❑**		85
4-pole – 1500 rpm at 50 Hz, 1800 rpm at 60 Hz												
4	4.6	100 L	1430	26.8	EFF2	84.2	85.1	0.81	8.5	**1LE1002-1AB6❑-❑❑❑❑**		27
5.5	6.3	112 M	1420	37	EFF2	85.7	86.5	0.81	11	**1LE1002-1BB6❑-❑❑❑❑**		33
11	12.6	132 M	1450	72	EFF2	88.8	89.3	0.84	21.5	**1LE1002-1CB6❑-❑❑❑❑**		58
18.5	21.3	160 L	1460	121	EFF2	90	90.2	0.85	35	**1LE1002-1DB6❑-❑❑❑❑**		85
6-pole – 1000 rpm at 50 Hz, 1200 rpm at 60 Hz												
2.2	2.55	100 L	930	22.5		76	77.3	0.78	5.3	**1LE1002-1AC6❑-❑❑❑❑**		24
3	3.45	112 M	945	30		79	78.2	0.72	7.6	**1LE1002-1BC6❑-❑❑❑❑**		32
7.5	8.6	132 M	950	75		85.5	85.7	0.74	17.2	**1LE1002-1CC6❑-❑❑❑❑**		54
15	17.3	160 L	965	148		88	88	0.75	33	**1LE1002-1DC6❑-❑❑❑❑**		109

Order No. supplements, see from Page 1/32.

[1] For Order No. 1LE1002-1CC6❑-❑❑❑❑ use acc. to temperature class 155 (F).

Selection and ordering data (continued)

Order No.	Locked-rotor torque	Locked-rotor current	Breakdown torque	Torque class	Moment of inertia	Noise at rated output	
	with direct starting as multiple of rated					Measuring-surface sound pressure level at 50 Hz	Sound pressure level at 50 Hz
	torque	current	torque				
	T_{LR}/T_{rated}	I_{LR}/I_{rated}	T_B/T_{rated}	CL	J kgm^2	L_{pfA} dB(A)	L_{WA} dB(A)
Motor version: temperature class 155 (F), IP55 degree of protection, with increased output, used acc. to temperature class 130 (B)							
2-pole – 3000 rpm at 50 Hz, 3600 rpm at 60 Hz							
1LE1002-1AA6❑-❑❑❑❑	4.5	7	4.1	16	0.0044	67	79
1LE1002-1BA6❑-❑❑❑❑	2.9	7.5	3.8	16	0.0085	69	81
1LE1002-1CA6❑-❑❑❑❑	2.8	7.5	3.7	16	0.02233	68	80
1LE1002-1DA6❑-❑❑❑❑	2.6	7.5	3.4	16	0.04913	70	82
4-pole – 1500 rpm at 50 Hz, 1800 rpm at 60 Hz							
1LE1002-1AB6❑-❑❑❑❑	2.9	5.8	3.1	16	0.01	60	72
1LE1002-1BB6❑-❑❑❑❑	3	5.8	3.1	16	0.0124	58	70
1LE1002-1CB6❑-❑❑❑❑	2.5	7.2	3	16	0.03259	64	76
1LE1002-1DB6❑-❑❑❑❑	2.7	7.2	3.2	16	0.06843	65	77
6-pole – 1000 rpm at 50 Hz, 1200 rpm at 60 Hz							
1LE1002-1AC6❑-❑❑❑❑	2	4	2.2	16	0.0084	59	71
1LE1002-1BC6❑-❑❑❑❑	2.9	4.6	3	16	0.0128	57	69
1LE1002-1CC6❑-❑❑❑❑	2.4	5.3	3	16	0.032	63	75
1LE1002-1DC6❑-❑❑❑❑	2.9	6	3.4	16	0.0936	67	79

1

Selection and ordering data (continued)

Order No. supplements

Motor type	Frame size	Positions 12 and 13: Voltages (voltage codes)							
		Standard voltages				Further voltages			
		50 Hz				50 Hz			
		230 VΔ/400 VY	400 VΔ/690 VY	500 VY	500 VΔ	220 VΔ/380 VY	380 VΔ/660 VY	415 VY	415 VΔ
		60 Hz				Rated voltage range			
		460 VY	460 VΔ			(210 … 230 VΔ/ 360 … 400 VY) 1)	(360 … 400 VΔ/ 625 … 695 VY) 1)	(395 … 435 VY) 1)	(395 … 435 VΔ) 1)
		see "Selection and ordering data" for outputs at 60 Hz							
		22	**34**	**27**	**40**	**21**	**33**	**23**	**35**
1LE1002-1A..❑-❑...	**100 L**	○	○	○	○	✓	✓	✓	✓
1LE1002-1B..❑-❑...	**112 M**	○	○	○	○	✓	✓	✓	✓
1LE1002-1C..❑-❑...	**132 M**	○	○	○	○	✓	✓	✓	✓
1LE1002-1D..❑-❑...	**160 L**	○	○	○	○	✓	✓	✓	✓

○ Without additional charge
✓ With additional charge

Order other voltages with voltage code **9** in position 12, code **0** in position 13 and the corresponding order code (see "Special versions" in the "Selection and ordering data" under "Voltages", Page 1/54).

Motor type	Frame size	Position 14: Types of construction (type letter)												
		Without flange							With flange (acc. to DIN EN 50347)					
		IM B3 2) 3)	IM B6 3)	IM B7 3)	IM B8 3)	IM V6 3)	IM V5 without protective cover 3)	IM V5 with protective cover 3) 4) 5)	Flange size	IM B5 3) 6)	IM V1 without protective cover 3)	IM V1 with protective cover 3) 4) 5)	IM V3 3)	IM B35
		A	**T**	**U**	**V**	**D**	**C**	**C**		**F**	**G**	**G**	**H**	**J**
	Order No. supplement **-Z** with order code	–	–	–	–	–	–	**-Z H00**		–	–	**-Z H00**	–	–
1LE1002-1A...-.❑..	**100 L**	❑	❑	❑	❑	❑	❑	✓	**FF 215**	✓	✓	✓	✓	✓
1LE1002-1B...-.❑..	**112 M**	❑	❑	❑	❑	❑	❑	✓	**FF 215**	✓	✓	✓	✓	✓
1LE1002-1C...-.❑..	**132 M**	❑	❑	❑	❑	❑	❑	✓	**FF 265**	✓	✓	✓	✓	✓
1LE1002-1D...-.❑..	**160 L**	❑	❑	❑	❑	❑	❑	✓	**FF 300**	✓	✓	✓	✓	✓

Motor type	Frame size	Position 14: Types of construction (type letter)											
		With standard flange (acc. to DIN EN 50347)						With standard flange (next larger standerd flange acc. to DIN EN 50347)					
		Flange size	IM B14 3) 7)	IM V19 3)	IM V18 without protective cover 3)	IM V18 with protective cover 3) 4) 5)	IM B34	Flange size	IM B14 3) 7)	IM V19 3)	IM V18 without protective cover 3)	IM V18 with protective cover 3) 4) 5)	IM B34
			K	**L**	**M**	**M**	**N**		**K**	**L**	**M**	**M**	**N**
	Order No. supplement **-Z** with order code		–	–	–	**-Z H00**	–		**-Z P01**	**-Z P01**	**-Z P01**	**-Z H00 P01**	**-Z P01**
1LE1002-1A...-.❑..	**100 L**	**FT 130**	✓	✓	✓	✓	✓	**FT 165**	✓	✓	✓	✓	✓
1LE1002-1B...-.❑..	**112 M**	**FT 130**	✓	✓	✓	✓	✓	**FT 165**	✓	✓	✓	✓	✓
1LE1002-1C...-.❑..	**132 S/M**	**FT 165**	✓	✓	✓	✓	✓	**FT 215**	✓	✓	✓	✓	✓
1LE1002-1D...-.❑..	**160 M/L**	**FT 215**	✓	✓	✓	✓	✓	–	–	–	–	–	–

❑ Standard version
✓ With additional charge

1) A rated voltage range is also specified on the rating plate.

2) The types of construction IM B6/7/8, IM V6 and IM V5 without protective cover/with protective cover are also possible as long as no condensation drainage holes (order code **H03**) and no stamping of these types of construction on the rating plate are required. As standard, the type of construction IM B3 is then stamped on the rating plate. With type of construction IM V5 with protective cover, the protective cover has to be additionally ordered with order code **H00**. The protective cover is not stamped on the rating plate.

3) The type of construction is stamped on the rating plate. When ordering with condensation drainage holes (order code **H03**), it is absolutely necessary to specify the type of construction for the exact position of the condensation drainage holes during manufacture.

4) Option second shaft extension (order code **L05**) not possible.

5) In combination with an encoder, it is not necessary to order the protective cover (order code **H00**), as this is delivered as a protection for the encoder as standard. In this case, the protective cover is standard design (without additional charge).

6) The types of construction IM V3 and IM V1 without protective cover/with protective cover are also possible as long as no condensation drainage holes (order code **H03**) and no stamping of these types of construction on the rating plate are required. As standard, the type of construction IM B5 is then stamped on the rating plate. With type of construction IM V1 with protective cover, the protective cover has to be additionally ordered with order code **H00**. The protective cover is not stamped on the rating plate.

7) The types of construction IM V19 and IM V18 without protective cover/with protective cover are also possible as long as no condensation drainage holes (order code **H03**) and no stamping of these types of construction on the rating plate are required. As standard, the type of construction IM B14 is then stamped on the rating plate. With type of construction IM V18 with protective cover, the protective cover has to be additionally ordered with order code **H00**. The protective cover is not stamped on the rating plate.

Selection and ordering data (continued)

Motor type	Frame size	Position 15: Motor protection (motor protection letter)					
		Without motor protection	Motor protection with PTC thermistors with 3 embedded temperature sensors for tripping [1]	Motor protection with PTC thermistors with 6 embedded temperature sensors for alarm and tripping [1]	Motor temperature detection with embedded temperature sensor KTY 84-130 [1]	NTC thermistors for tripping	Temperature detectors for tripping [1]
		A	B	C	F	Z	Z
	Order code					Q2A	Q3A
1LE1002-1A...-..□.	**100 L**	□	✓	✓	✓	✓	✓
1LE1002-1B...-..□.	**112 M**	□	✓	✓	✓	✓	✓
1LE1002-1C...-..□.	**132 M**	□	✓	✓	✓	✓	✓
1LE1002-1D...-..□.	**160 L**	□	✓	✓	✓	✓	✓

□ Standard version
✓ With additional charge

Motor type	Frame size	Position 16: Connection box (connection box code)			
		Connection box top [2]	Connection box on RHS [2]	Connection box on LHS [2]	Connection box bottom [2]
		4	5	6	7
1LE1002-1A...-...□	**100 L**	□	✓	✓	✓
1LE1002-1B...-...□	**112 M**	□	✓	✓	✓
1LE1002-1C...-...□	**132 M**	□	✓	✓	✓
1LE1002-1D...-...□	**160 L**	□	✓	✓	✓

□ Standard version
✓ With additional charge

[1] Evaluation with appropriate tripping unit (see Catalog LV 1) is recommended.
[2] With type of construction, screwed-on feet as standard.

Self-ventilated motors with increased output and high efficiency

Selection and ordering data

Rated output at 50 Hz P_{rated} kW	Rated output at 60 Hz P_{rated} kW	Frame size FS	Operating values at rated output: Rated speed at 50 Hz n_{rated} rpm	Rated torque at 50 Hz T_{rated} Nm	Efficiency Class according to CEMEP EFF	Efficiency at 50 Hz 4/4-load η_{rated} %	Efficiency at 50 Hz 3/4-load η_{rated} %	Power factor at 50 Hz 4/4-load $\cos\varphi_{rated}$	Rated current at 400 V, 50 Hz I_{rated} A	Order No. For Order No. supplements for voltage, type of construction, motor protection and connection box, see table from Page 1/36.	Price IM B3 type of construction	Weight IM B3 type of construction approx. m kg
Motor version: temperature class 155 (F), IP55 degree of protection, with increased output, used acc. to temperature class 130 (B)												
2-pole – 3000 rpm at 50 Hz, 3600 rpm at 60 Hz												
4	4.6	100 L	2905	13	EFF1	88	89	0.86	7.6	**1LE1001-1AA6❑-❑❑❑❑**		26
5.5	6.3	112 M	2950	18	EFF1	89	88.5	0.89	10	**1LE1001-1BA6❑-❑❑❑❑**		34
11	12.6	132 M	2955	36	EFF1	91.5	92.5	0.89	19.4	**1LE1001-1CA6❑-❑❑❑❑**		57
22	25.3	160 L	2955	71	EFF1	92.8	93.5	0.89	38.5	**1LE1001-1DA6❑-❑❑❑❑**		94
4-pole – 1500 rpm at 50 Hz, 1800 rpm at 60 Hz												
4	4.6	100 L	1460	26	EFF1	88.3	88.3	0.8	8.2	**1LE1001-1AB6❑-❑❑❑❑**		30
5.5	6.3	112 M	1460	36	EFF1	89.2	89.2	0.81	11	**1LE1001-1BB6❑-❑❑❑❑**		34
11	12.6	132 M	1465	72	EFF1	91	91.0	0.84	21	**1LE1001-1CB6❑-❑❑❑❑**		64
18.5	21.3	160 L	1475	120	EFF1	92.4	92.4	0.85	34	**1LE1001-1DB6❑-❑❑❑❑**		100
6-pole – 1000 rpm at 50 Hz, 1200 rpm at 60 Hz												
2.2	2.55	100 L	965	22		84.5	85.6	0.76	4.95	**1LE1001-1AC6❑-❑❑❑❑**		30
3	3.45	112 M	960	30		84.5	84.7	0.79	6.5	**1LE1001-1BC6❑-❑❑❑❑**		34
7.5	8.6	132 M	970	74		88.5	88.5	0.77	15.4	**1LE1001-1CC6❑-❑❑❑❑**		64
15	17.3	160 L	975	147		90.6	91	0.81	29.5	**1LE1001-1DC6❑-❑❑❑❑**		115

Order No. supplements, see from Page 1/36.

Selection and ordering data (continued)

Order No.	Locked-rotor torque	Locked-rotor current	Breakdown torque	Torque class	Moment of inertia	Noise at rated output	
	with direct starting as multiple of rated						
	torque	current	torque			Measuring-surface sound pressure level at 50 Hz	Sound pressure level at 50 Hz
	T_{LR}/T_{rated}	I_{LR}/I_{rated}	T_B/T_{rated}	CL	J kgm^2	L_{pfA} dB(A)	L_{WA} dB(A)
Motor version: temperature class 155 (F), IP55 degree of protection, with increased output, used acc. to temperature class 130 (B)							
2-pole – 3000 rpm at 50 Hz, 3600 rpm at 60 Hz							
1LE1001-1AA6❑-❑❑❑❑	2.5	7.6	3.5	16	0.0054	67	79
1LE1001-1BA6❑-❑❑❑❑	2.2	7.7	3.3	16	0.0119	73	85
1LE1001-1CA6❑-❑❑❑❑	2.5	7.9	3.2	16	0.03143	68	80
1LE1001-1DA6❑-❑❑❑❑	3.1	8.4	3.7	16	0.06764	70	82
4-pole – 1500 rpm at 50 Hz, 1800 rpm at 60 Hz							
1LE1001-1AB6❑-❑❑❑❑	2.2	7.5	3.5	16	0.0137	60	72
1LE1001-1BB6❑-❑❑❑❑	2.5	7.1	3.1	16	0.0166	58	70
1LE1001-1CB6❑-❑❑❑❑	2.9	7.7	3.1	16	0.04571	64	76
1LE1001-1DB6❑-❑❑❑❑	2.8	7.7	3.3	16	0.09854	65	77
6-pole – 1000 rpm at 50 Hz, 1200 rpm at 60 Hz							
1LE1001-1AC6❑-❑❑❑❑	1.9	5.7	2.9	16	0.0137	59	71
1LE1001-1BC6❑-❑❑❑❑	2.1	6	3.1	16	0.0166	57	69
1LE1001-1CC6❑-❑❑❑❑	2.1	6.5	3	16	0.04572	63	75
1LE1001-1DC6❑-❑❑❑❑	1.9	6.5	2.9	16	0.1208	67	79

1

Selection and ordering data (continued)

Order No. supplements

Motor type	Frame size	Positions 12 and 13: Voltages (voltage codes)							
		Standard voltages				Further voltages			
		50 Hz				50 Hz			
		230 VΔ/400 VY	400 VΔ/690 VY	500 VY	500 VΔ	220 VΔ/380 VY	380 VΔ/660 VY	415 VY	415 VΔ
		60 Hz				Rated voltage range			
		460 VY	460 VΔ			(210 … 230 VΔ/ 360 … 400 VY) [1]	(360 … 400 VΔ/ 625 … 695 VY) [1]	(395 … 435 VY) [1]	(395 … 435 VΔ) [1]
		see "Selection and ordering data" for outputs at 60 Hz							
		22	**34**	**27**	**40**	**21**	**33**	**23**	**35**
1LE1001-1A..❑-❑...	**100 L**	○	○	○	○	✓	✓	✓	✓
1LE1001-1B..❑-❑...	**112 M**	○	○	○	○	✓	✓	✓	✓
1LE1001-1C..❑-❑...	**132 M**	○	○	○	○	✓	✓	✓	✓
1LE1001-1D..❑-❑...	**160 L**	○	○	○	○	✓	✓	✓	✓

○ Without additional charge
✓ With additional charge

Order other voltages with voltage code **9** in position 12, code **0** in position 13 and the corresponding order code (see "Special versions" in the "Selection and ordering data" under "Voltages", Page 1/54).

Motor type	Frame size	Position 14: Types of construction (type letter)												
		Without flange							With flange (acc. to DIN EN 50347)					
		IM B3 [2] [3]	IM B6 [3]	IM B7 [3]	IM B8 [3]	IM V6 [3]	IM V5 without protective cover [3]	IM V5 with protective cover [3] [4] [5]	Flange size	IM B5 [3] [6]	IM V1 without protective cover [3]	IM V1 with protective cover [3] [4] [5]	IM V3 [3]	IM B35
		A	**T**	**U**	**V**	**D**	**C**	**C**		**F**	**G**	**G**	**H**	**J**
	Order No. supplement **-Z** with order code	–	–	–	–	–	–	**-Z H00**		–	–	**-Z H00**	–	–
1LE1001-1A...-.❑..	**100 L**	❑	❑	❑	❑	❑	❑	✓	**FF 215**	✓	✓	✓	✓	✓
1LE1001-1B...-.❑..	**112 M**	❑	❑	❑	❑	❑	❑	✓	**FF 215**	✓	✓	✓	✓	✓
1LE1001-1C...-.❑..	**132 M**	❑	❑	❑	❑	❑	❑	✓	**FF 265**	✓	✓	✓	✓	✓
1LE1001-1D...-.❑..	**160 L**	❑	❑	❑	❑	❑	❑	✓	**FF 300**	✓	✓	✓	✓	✓

Motor type	Frame size	Position 14: Types of construction (type letter)											
		With standard flange (acc. to DIN EN 50347)						With standard flange (next larger standerd flange acc. to DIN EN 50347)					
		Flange size	IM B14 [3] [7]	IM V19 [3]	IM V18 without protective cover [3]	IM V18 with protective cover [3] [4] [5]	IM B34	Flange size	IM B14 [3] [7]	IM V19 [3]	IM V18 without protective cover [3]	IM V18 with protective cover [3] [4] [5]	IM B34
			K	**L**	**M**	**M**	**N**		**K**	**L**	**M**	**M**	**N**
	Order No. supplement **-Z** with order code		–	–	–	**-Z H00**	–		**-Z P01**	**-Z P01**	**-Z P01**	**-Z H00 P01**	**-Z P01**
1LE1001-1A...-.❑..	**100 L**	**FT 130**	✓	✓	✓	✓	✓	**FT 165**	✓	✓	✓	✓	✓
1LE1001-1B...-.❑..	**112 M**	**FT 130**	✓	✓	✓	✓	✓	**FT 165**	✓	✓	✓	✓	✓
1LE1001-1C...-.❑..	**132 S/M**	**FT 165**	✓	✓	✓	✓	✓	**FT 215**	✓	✓	✓	✓	✓
1LE1001-1D...-.❑..	**160 M/L**	**FT 215**	✓	✓	✓	✓	✓	–	–	–	–	–	–

❑ Standard version
✓ With additional charge

1) A rated voltage range is also specified on the rating plate.

2) The types of construction IM B6/7/8, IM V6 and IM V5 without protective cover/with protective cover are also possible as long as no condensation drainage holes (order code **H03**) and no stamping of these types of construction on the rating plate are required. As standard, the type of construction IM B3 is then stamped on the rating plate. With type of construction IM V5 with protective cover, the protective cover has to be additionally ordered with order code **H00**. The protective cover is not stamped on the rating plate.

3) The type of construction is stamped on the rating plate. When ordering with condensation drainage holes (order code **H03**), it is absolutely necessary to specify the type of construction for the exact position of the condensation drainage holes during manufacture.

4) Option second shaft extension (order code **L05**) not possible.

5) In combination with an encoder, it is not necessary to order the protective cover (order code **H00**), as this is delivered as a protection for the encoder as standard. In this case, the protective cover is standard design (without additional charge).

6) The types of construction IM V3 and IM V1 without protective cover/with protective cover are also possible as long as no condensation drainage holes (order code **H03**) and no stamping of these types of construction on the rating plate are required. As standard, the type of construction IM B5 is then stamped on the rating plate. With type of construction IM V1 with protective cover, the protective cover has to be additionally ordered with order code **H00**. The protective cover is not stamped on the rating plate.

7) The types of construction IM V19 and IM V18 without protective cover/with protective cover are also possible as long as no condensation drainage holes (order code **H03**) and no stamping of these types of construction on the rating plate are required. As standard, the type of construction IM B14 is then stamped on the rating plate. With type of construction IM V18 with protective cover, the protective cover has to be additionally ordered with order code **H00**. The protective cover is not stamped on the rating plate.

Selection and ordering data (continued)

Motor type	Frame size	Position 15: Motor protection (motor protection letter)					
		Without motor protection	Motor protection with PTC thermistors with 3 embedded temperature sensors for tripping [1]	Motor protection with PTC thermistors with 6 embedded temperature sensors for alarm and tripping [1]	Motor temperature detection with embedded temperature sensor KTY 84-130 [1]	NTC thermistors for tripping	Temperature detectors for tripping [1]
		A	**B**	**C**	**F**	**Z**	**Z**
	Order code					**Q2A**	**Q3A**
1LE1001-1A...-..□.	**100 L**	□	✓	✓	✓	✓	✓
1LE1001-1B...-..□.	**112 M**	□	✓	✓	✓	✓	✓
1LE1001-1C...-..□.	**132 M**	□	✓	✓	✓	✓	✓
1LE1001-1D...-..□.	**160 L**	□	✓	✓	✓	✓	✓

□ Standard version
✓ With additional charge

Motor type	Frame size	Position 16: Connection box (connection box code)			
		Connection box top [2]	Connection box on RHS [2]	Connection box on LHS [2]	Connection box bottom [2]
		4	**5**	**6**	**7**
1LE1001-1A...-...□	**100 L**	□	✓	✓	✓
1LE1001-1B...-...□	**112 M**	□	✓	✓	✓
1LE1001-1C...-...□	**132 M**	□	✓	✓	✓
1LE1001-1D...-...□	**160 L**	□	✓	✓	✓

□ Standard version
✓ With additional charge

[1] Evaluation with appropriate tripping unit (see Catalog LV 1) is recommended.

[2] With type of construction, screwed-on feet as standard.

Forced-air cooled motors without external fan and fan cover with improved efficiency

Selection and ordering data

Rated output at 50 Hz P_{rated} kW	Rated output at 60 Hz P_{rated} kW	Frame size FS	Operating values at rated output: Rated speed at 50 Hz n_{rated} rpm	Rated torque at 50 Hz T_{rated} Nm	Efficiency Class according to CEMEP EFF2	Efficiency at 50 Hz 4/4-load η_{rated} %	Efficiency at 50 Hz 3/4-load η_{rated} %	Power factor at 50 Hz 4/4-load $\cos\varphi_{rated}$	Rated current at 400 V. 50 Hz I_{rated} A	Order No. with -Z and order code For Order No. supplements for voltage, type of construction, motor protection and connection box, see table from Page 1/40.	Price IM B3 type of construction	Weight IM B3 type of construction approx. m kg
Motor version: temperature class 155 (F), IP55 degree of protection, used acc. to temperature class 130 (B)												
2-pole – 3000 rpm at 50 Hz, 3600 rpm at 60 Hz												
3	3.45	100 L	2835	10	EFF2	82.6	83.2	0.87	6	**1LE1002-1AA4❑-❑❑❑❑-Z F90**		20
4	4.6	112 M	2930	13	EFF2	84.8	84.4	0.86	7.9	**1LE1002-1BA2❑-❑❑❑❑-Z F90**		25
5.5	6.3	132 S	2905	18	EFF2	86	86.6	0.89	10.4	**1LE1002-1CA0❑-❑❑❑❑-Z F90**		35
7.5	8.6	132 S	2925	24	EFF2	87.6	88.7	0.88	14	**1LE1002-1CA1❑-❑❑❑❑-Z F90**		40
11	12.6	160 M	2920	36	EFF2	88.4	88.5	0.85	21	**1LE1002-1DA2❑-❑❑❑❑-Z F90**		60
15	17.3	160 M	2930	49	EFF2	89.5	89.7	0.84	29	**1LE1002-1DA3❑-❑❑❑❑-Z F90**		68
18.5	21.3	160 L	2935	60	EFF2	90.9	91	0.86	34	**1LE1002-1DA4❑-❑❑❑❑-Z F90**		78
4-pole – 1500 rpm at 50 Hz, 1800 rpm at 60 Hz												
2.2	2.55	100 L	1425	14.8	EFF2	81	84	0.81	4.85	**1LE1002-1AB4❑-❑❑❑❑-Z F90**		18
3	3.45	100 L	1425	20.2	EFF2	82.8	83.6	0.85	6.2	**1LE1002-1AB5❑-❑❑❑❑-Z F90**		22
4	4.6	112 M	1435	27	EFF2	84.2	85.1	0.84	8.2	**1LE1002-1BB2❑-❑❑❑❑-Z F90**		27
5.5	6.3	132 S	1450	36	EFF2	86	86.5	0.83	11.2	**1LE1002-1CB0❑-❑❑❑❑-Z F90**		38
7.5	8.6	132 M	1450	49	EFF2	87	87.4	0.83	15	**1LE1002-1CB2❑-❑❑❑❑-Z F90**		44
11	12.6	160 M	1460	72	EFF2	88.4	88.1	0.82	22	**1LE1002-1DB2❑-❑❑❑❑-Z F90**		62
15	17.3	160 L	1460	98	EFF2	89.4	89.7	0.82	29.5	**1LE1002-1DB4❑-❑❑❑❑-Z F90**		73
6-pole – 1000 rpm at 50 Hz, 1200 rpm at 60 Hz												
1.5	1.75	100 L	940	15.3		74	72.6	0.74	3.95	**1LE1002-1AC4❑-❑❑❑❑-Z F90**		19
2.2	2.55	112 M	930	23		78	78.1	0.77	5.3	**1LE1002-1BC2❑-❑❑❑❑-Z F90**		25
3	3.45	132 S	955	30		80	79.4	0.74	7.3	**1LE1002-1CC0❑-❑❑❑❑-Z F90**		34
4	4.6	132 M	950	40		83	83.4	0.76	9.2	**1LE1002-1CC2❑-❑❑❑❑-Z F90**		39
5.5	6.3	132 M	950	55		85	85.3	0.75	12.4	**1LE1002-1CC3❑-❑❑❑❑-Z F90**		48
7.5	8.6	160 M	970	75		86	85.4	0.73	17.2	**1LE1002-1DC2❑-❑❑❑❑-Z F90**		72
11	12.6	160 L	965	110		87.6	87.9	0.77	23.5	**1LE1002-1DC4❑-❑❑❑❑-Z F90**		92
8-pole – 750 rpm at 50 Hz, 900 rpm at 60 Hz												
0.75	0.86	100 L	705	10.4		65.4	60.2	0.62	2.65	**1LE1002-1AD4❑-❑❑❑❑-Z F90**		17
1.1	1.3	100 L	705	15.1		68.3	67.6	0.63	3.71	**1LE1002-1AD5❑-❑❑❑❑-Z F90**		22
1.5	1.75	112 M	700	20		75.9	72.8	0.68	4.2	**1LE1002-1BD2❑-❑❑❑❑-Z F90**		25
2.2	2.55	132 S	715	29		81	80	0.66	5.9	**1LE1002-1CD0❑-❑❑❑❑-Z F90**		37
3	3.45	132 M	710	40		81.6	81	0.68	7.8	**1LE1002-1CD2❑-❑❑❑❑-Z F90**		44
4	4.6	160 M	720	53		80	78.7	0.69	10.4	**1LE1002-1DD2❑-❑❑❑❑-Z F90**		60
5.5	6.3	160 M	720	73		83.5	83.9	0.70	13.6	**1LE1002-1DD3❑-❑❑❑❑-Z F90**		72
7.5	8.6	160 L	715	100		83.5	84.7	0.70	18.6	**1LE1002-1DD4❑-❑❑❑❑-Z F90**		91

Order No. supplements, see from Page 1/40.

Selection and ordering data (continued)

Order No. with -Z and order code	Locked-rotor torque	Locked-rotor current	Breakdown torque	Torque class	Moment of inertia	Noise at rated output	
	with direct starting as multiple of rated					Measuring-surface sound pressure level at 50 Hz	Sound pressure level at 50 Hz
	torque	current	torque				
	T_{LR}/T_{rated}	I_{LR}/I_{rated}	T_B/T_{rated}	CL	J kgm^2	L_{pfA} dB(A)	L_{WA} dB(A)
Motor version: temperature class 155 (F), IP55 degree of protection, used acc. to temperature class 130 (B)							
2-pole – 3000 rpm at 50 Hz, 3600 rpm at 60 Hz							
1LE1002-1AA4❑-❑❑❑❑-Z F90	3.2	6.2	2.9	16	0.0034	67	79
1LE1002-1BA2❑-❑❑❑❑-Z F90	2.7	7.3	3.7	16	0.0067	69	81
1LE1002-1CA0❑-❑❑❑❑-Z F90	2	5.6	2.6	16	0.01267	68	80
1LE1002-1CA1❑-❑❑❑❑-Z F90	2.2	6.4	3	16	0.01601	68	80
1LE1002-1DA2❑-❑❑❑❑-Z F90	2.1	6.1	2.7	16	0.02971	70	82
1LE1002-1DA3❑-❑❑❑❑-Z F90	2.5	6.1	3.2	16	0.03619	70	82
1LE1002-1DA4❑-❑❑❑❑-Z F90	2.5	7	3.2	16	0.04395	70	82
4-pole – 1500 rpm at 50 Hz, 1800 rpm at 60 Hz							
1LE1002-1AB4❑-❑❑❑❑-Z F90	2.3	5.1	2.7	16	0.0059	60	72
1LE1002-1AB5❑-❑❑❑❑-Z F90	2.4	5.4	2.6	16	0.0078	60	72
1LE1002-1BB2❑-❑❑❑❑-Z F90	2.2	5.3	2.6	16	0.0102	58	70
1LE1002-1CB0❑-❑❑❑❑-Z F90	2.3	6.2	2.7	16	0.0186	64	76
1LE1002-1CB2❑-❑❑❑❑-Z F90	2.5	6.6	2.9	16	0.02371	64	76
1LE1002-1DB2❑-❑❑❑❑-Z F90	2.3	6.4	3.1	16	0.04395	65	77
1LE1002-1DB4❑-❑❑❑❑-Z F90	2.5	7	3.4	16	0.05616	65	77
6-pole – 1000 rpm at 50 Hz, 1200 rpm at 60 Hz							
1LE1002-1AC4❑-❑❑❑❑-Z F90	2	4	2.2	16	0.0065	59	71
1LE1002-1BC2❑-❑❑❑❑-Z F90	2.3	4.1	2.5	16	0.0092	57	69
1LE1002-1CC0❑-❑❑❑❑-Z F90	2	4.6	2.6	16	0.0167	63	75
1LE1002-1CC2❑-❑❑❑❑-Z F90	2.1	4.7	2.5	16	0.02116	63	75
1LE1002-1CC3❑-❑❑❑❑-Z F90	2.5	5.2	2.8	16	0.02734	63	75
1LE1002-1DC2❑-❑❑❑❑-Z F90	2.1	5.5	2.9	16	0.04993	68	80
1LE1002-1DC4❑-❑❑❑❑-Z F90	1.9	5.9	2.7	16	0.0678	68	80
8-pole – 750 rpm at 50 Hz, 900 rpm at 60 Hz							
1LE1002-1AD4❑-❑❑❑❑-Z F90	1.9	3	2.2	16	0.0056	60	72
1LE1002-1AD5❑-❑❑❑❑-Z F90	2	3.2	2.3	16	0.0078	60	72
1LE1002-1BD2❑-❑❑❑❑-Z F90	1.9	3.4	2.1	16	0.0094	63	75
1LE1002-1CD0❑-❑❑❑❑-Z F90	1.7	3.9	2.4	13	0.0186	63	75
1LE1002-1CD2❑-❑❑❑❑-Z F90	1.8	3.9	2.2	13	0.02372	63	75
1LE1002-1DD2❑-❑❑❑❑-Z F90	1.7	3.8	2.3	13	0.0439	63	75
1LE1002-1DD3❑-❑❑❑❑-Z F90	1.6	4	2.2	13	0.0562	63	75
1LE1002-1DD4❑-❑❑❑❑-Z F90	1.7	3.8	2.2	13	0.0772	63	75

Forced-air cooled motors without external fan and fan cover with improved efficiency

Selection and ordering data (continued)

Order No. supplements

Motor type	Frame size	Positions 12 and 13: Voltages (voltage codes)							
		Standard voltages				Further voltages			
		50 Hz				50 Hz			
		230 VΔ/400 VY	400 VΔ/690 VY	500 VY	500 VΔ	220 VΔ/380 VY	380 VΔ/660 VY	415 VY	415 VΔ
		60 Hz				Rated voltage range			
		460 VY	460 VΔ			(210 … 230 VΔ/ 360 … 400 VY) [1]	(360 … 400 VΔ/ 625 … 695 VY) [1]	(395 … 435 VY) [1]	(395 … 435 VΔ) [1]
		see "Selection and ordering data" for outputs at 60 Hz							
		22	**34**	**27**	**40**	**21**	**33**	**23**	**35**
1LE1002-1A..❑-❑...-Z F90	**100 L**	○	○	○	○	✓	✓	✓	✓
1LE1002-1B..❑-❑...-Z F90	**112 M**	○	○	○	○	✓	✓	✓	✓
1LE1002-1C..❑-❑...-Z F90	**132 S/M**	○	○	○	○	✓	✓	✓	✓
1LE1002-1D..❑-❑...-Z F90	**160 M/L**	○	○	○	○	✓	✓	✓	✓

○ Without additional charge
✓ With additional charge

Order other voltages with voltage code **9** in position 12, code **0** in position 13 and the corresponding order code (see "Special versions" in the "Selection and ordering data" under "Voltages", Page 1/54).

Motor type	Frame size	Position 14: Types of construction (type letter)										
		Without flange						With flange (acc. to DIN EN 50347)				
		IM B3 [2] [3]	IM B6 [3]	IM B7 [3]	IM B8 [3]	IM V6 [3]	IM V5 without protective cover [3]	Flange size	IM B5 [3] [4]	IM V1 without protective cover [3]	IM V3 [3]	IM B35
		A	**T**	**U**	**V**	**D**	**C**		**F**	**G**	**H**	**J**
	Order No. supplement **-Z** with order code	–	–	–	–	–	–		–	–	–	–
1LE1002-1A...-.❑..-Z F90	**100 L**	❑	❑	❑	❑	❑	❑	**FF 215**	✓	✓	✓	✓
1LE1002-1B...-.❑..-Z F90	**112 M**	❑	❑	❑	❑	❑	❑	**FF 215**	✓	✓	✓	✓
1LE1002-1C...-.❑..-Z F90	**132 S/M**	❑	❑	❑	❑	❑	❑	**FF 265**	✓	✓	✓	✓
1LE1002-1D...-.❑..-Z F90	**160 M/L**	❑	❑	❑	❑	❑	❑	**FF 300**	✓	✓	✓	✓

Motor type	Frame size	Position 14: Types of construction (type letter)									
		With standard flange (acc. to DIN EN 50347)					With standard flange (next larger standerd flange acc. to DIN EN 50347)				
		Flange size	IM B14 [3] [5]	IM V19 [3]	IM V18 without protective cover [3]	IM B34	Flange size	IM B14 [3] [5]	IM V19 [3]	IM V18 without protective cover [3]	IM B34
			K	**L**	**M**	**N**		**K**	**L**	**M**	**N**
	Order No. supplement **-Z** with order code		–	–	–	–		**-Z**	**-Z**	**-Z**	**-Z**
								P01	**P01**	**P01**	**P01**
1LE1002-1A...-.❑..-Z F90	**100 L**	**FT 130**	✓	✓	✓	✓	**FT 165**	✓	✓	✓	✓
1LE1002-1B...-.❑..-Z F90	**112 M**	**FT 130**	✓	✓	✓	✓	**FT 165**	✓	✓	✓	✓
1LE1002-1C...-.❑..-Z F90	**132 S/M**	**FT 165**	✓	✓	✓	✓	**FT 215**	✓	✓	✓	✓
1LE1002-1D...-.❑..-Z F90	**160 M/L**	**FT 215**	✓	✓	✓	✓	–	–	–	–	–

❑ Standard version
✓ With additional charge

1) A rated voltage range is also specified on the rating plate.

2) The types of construction IM B6/7/8, IM V6 and IM V5 without protective cover are also possible as long as no condensation drainage holes (order code **H03**) and no stamping of these types of construction on the rating plate are required. As standard, the type of construction IM B3 is then stamped on the rating plate.

3) The type of construction is stamped on the rating plate. When ordering with condensation drainage holes (order code **H03**), it is absolutely necessary to specify the type of construction for the exact position of the condensation drainage holes during manufacture.

4) The types of construction IM V3 and IM V1 without protective cover are also possible as long as no condensation drainage holes (order code **H03**) and no stamping of these types of construction on the rating plate are required. As standard, the type of construction IM B5 is then stamped on the rating plate.

5) The types of construction IM V19 and IM V18 without protective cover are also possible as long as no condensation drainage holes (order code **H03**) and no stamping of these types of construction on the rating plate are required. As standard, the type of construction IM B14 is then stamped on the rating plate.

Selection and ordering data (continued)

Motor type	Frame size	Position 15: Motor protection (motor protection letter)					
		Without motor protection	Motor protection with PTC thermistors with 3 embedded temperature sensors for tripping [1]	Motor protection with PTC thermistors with 6 embedded temperature sensors for alarm and tripping [1]	Motor temperature detection with embedded temperature sensor KTY 84-130 [1]	NTC thermistors for tripping	Temperature detectors for tripping [1]
		A	**B**	**C**	**F**	**Z**	**Z**
	Order code					**Q2A**	**Q3A**
1LE1002-1A...-..❑.-Z F90	**100 L**	◻	✓	✓	✓	✓	✓
1LE1002-1B...-..❑.-Z F90	**112 M**	◻	✓	✓	✓	✓	✓
1LE1002-1C...-..❑.-Z F90	**132 S/M**	◻	✓	✓	✓	✓	✓
1LE1002-1D...-..❑.-Z F90	**160 M/L**	◻	✓	✓	✓	✓	✓

◻ Standard version
✓ With additional charge

Motor type	Frame size	Position 16: Connection box (connection box code)			
		Connection box top [2]	Connection box on RHS [3]	Connection box on LHS [3]	Connection box bottom [3]
		4	**5**	**6**	**7**
1LE1002-1A...-...❑-Z F90	**100 L**	◻	✓	✓	✓
1LE1002-1B...-...❑-Z F90	**112 M**	◻	✓	✓	✓
1LE1002-1C...-...❑-Z F90	**132 S/M**	◻	✓	✓	✓
1LE1002-1D...-...❑-Z F90	**160 M/L**	◻	✓	✓	✓

◻ Standard version
✓ With additional charge

[1] Evaluation with appropriate tripping unit (see Catalog LV 1) is recommended.

[2] With type of construction, cast feet as standard. Screwed-on feet are available with order code **H01**, see "Special versions".

[3] With type of construction, screwed-on feet as standard.

Forced-air cooled motors without external fan and fan cover with high efficiency

Selection and ordering data (continued)

Rated output at 50 Hz P_{rated} kW	Rated output at 60 Hz P_{rated} kW	Frame size FS	Operating values at rated output: Rated speed at 50 Hz n_{rated} rpm	Rated torque at 50 Hz T_{rated} Nm	Efficiency Class according to CEMEP	Efficiency at 50 Hz 4/4-load η_{rated} %	Efficiency at 50 Hz 3/4-load η_{rated} %	Power factor at 50 Hz 4/4-load $\cos\varphi_{rated}$	Rated current at 400 V. 50 Hz I_{rated} A	Order No. with -Z and order code: For Order No. supplements for voltage, type of construction, motor protection and connection box, see table from Page 1/44.	Price IM B3 type of construction	Weight IM B3 type of construction approx. m kg
Motor version: temperature class 155 (F), IP55 degree of protection, used acc. to temperature class 130 (B)												
2-pole – 3000 rpm at 50 Hz, 3600 rpm at 60 Hz												
3	3.45	100 L	2905	9.9	EFF1	86.7	87.5	0.84	5.9	**1LE1001-1AA4❑-❑❑❑❑-Z F90**		21
4	4.6	112 M	2950	13	EFF1	88	88.5	0.86	7.4	**1LE1001-1BA2❑-❑❑❑❑-Z F90**		27
5.5	6.3	132 S	2950	18	EFF1	89.5	90.6	0.87	10.2	**1LE1001-1CA0❑-❑❑❑❑-Z F90**		39
7.5	8.6	132 S	2950	24	EFF1	90	91	0.87	13.8	**1LE1001-1CA1❑-❑❑❑❑-Z F90**		43
11	12.6	160 M	2955	36	EFF1	90.8	91	0.87	20	**1LE1001-1DA2❑-❑❑❑❑-Z F90**		67
15	17.3	160 M	2955	48	EFF1	91.4	91.5	0.88	27	**1LE1001-1DA3❑-❑❑❑❑-Z F90**		75
18.5	21.3	160 L	2955	60	EFF1	92	92.5	0.88	33	**1LE1001-1DA4❑-❑❑❑❑-Z F90**		84
4-pole – 1500 rpm at 50 Hz, 1800 rpm at 60 Hz												
2.2	2.55	100 L	1455	14	EFF1	86.4	87	0.81	4.55	**1LE1001-1AB4❑-❑❑❑❑-Z F90**		21
3	3.45	100 L	1455	20	EFF1	87.4	88	0.82	6	**1LE1001-1AB5❑-❑❑❑❑-Z F90**		25
4	4.6	112 M	1460	26	EFF1	88.3	88.5	0.81	8.1	**1LE1001-1BB2❑-❑❑❑❑-Z F90**		29
5.5	6.3	132 S	1465	36	EFF1	89.2	89.5	0.80	11.2	**1LE1001-1CB0❑-❑❑❑❑-Z F90**		42
7.5	8.6	132 M	1465	49	EFF1	90.1	91	0.83	14.4	**1LE1001-1CB2❑-❑❑❑❑-Z F90**		49
11	12.6	160 M	1470	71	EFF1	91.2	91.8	0.85	20.5	**1LE1001-1DB2❑-❑❑❑❑-Z F90**		71
15	17.3	160 L	1475	97	EFF1	92	92.4	0.85	27.5	**1LE1001-1DB4❑-❑❑❑❑-Z F90**		83
6-pole – 1000 rpm at 50 Hz, 1200 rpm at 60 Hz												
1.5	1.75	100 L	970	15		84.5	84.5	0.73	3.5	**1LE1001-1AC4❑-❑❑❑❑-Z F90**		25
2.2	2.55	112 M	965	22		85	85	0.75	5	**1LE1001-1BC2❑-❑❑❑❑-Z F90**		29
3	3.45	132 S	970	30		85	85	0.74	6.9	**1LE1001-1CC0❑-❑❑❑❑-Z F90**		38
4	4.6	132 M	970	39		86	86	0.78	8.6	**1LE1001-1CC2❑-❑❑❑❑-Z F90**		43
5.5	6.3	132 M	970	54		88	88	0.77	11.8	**1LE1001-1CC3❑-❑❑❑❑-Z F90**		52
7.5	8.6	160 M	975	73		89	89	0.77	15.8	**1LE1001-1DC2❑-❑❑❑❑-Z F90**		77
11	12.6	160 L	975	108		89.5	89	0.80	22	**1LE1001-1DC4❑-❑❑❑❑-Z F90**		93
8-pole – 750 rpm at 50 Hz, 900 rpm at 60 Hz												
0.75	0.86	100 L	725	9.9		68	65	0.58	2.75	**1LE1001-1AD4❑-❑❑❑❑-Z F90**		21
1.1	1.3	110 L	725	14		68	64.5	0.58	4.05	**1LE1001-1AD5❑-❑❑❑❑-Z F90**		25
1.5	1.75	112 M	720	20		77	75.5	0.67	4.2	**1LE1001-1BD2❑-❑❑❑❑-Z F90**		29
2.2	2.55	132 S	725	29		77.5	76.7	0.63	6.5	**1LE1001-1CD0❑-❑❑❑❑-Z F90**		41
3	3.45	132 M	730	40		84	82	0.65	7.9	**1LE1001-1CD2❑-❑❑❑❑-Z F90**		49
4	4.6	160 M	730	52		87	88	0.69	9.6	**1LE1001-1DD2❑-❑❑❑❑-Z F90**		69
5.5	6.3	160 M	735	72		87.5	89	0.69	13.2	**1LE1001-1DD3❑-❑❑❑❑-Z F90**		82
7.5	8.6	160 L	730	98		88	89	0.72	17	**1LE1001-1DD4❑-❑❑❑❑-Z F90**		94

Order No. supplements, see from Page 1/44.

Selection and ordering data (continued)

Order No. with -Z and order code	Locked-rotor torque with direct starting as multiple of rated torque	Locked-rotor current with direct starting as multiple of rated current	Breakdown torque with direct starting as multiple of rated torque	Torque class	Moment of inertia	Noise at rated output: Measuring-surface sound pressure level at 50 Hz	Noise at rated output: Sound pressure level at 50 Hz
	T_{LR}/T_{rated}	I_{LR}/I_{rated}	T_B/T_{rated}	CL	J kgm^2	L_{pfA} dB(A)	L_{WA} dB(A)
Motor version: temperature class 155 (F), IP55 degree of protection, used acc. to temperature class 130 (B)							
2-pole – 3000 rpm at 50 Hz, 3600 rpm at 60 Hz							
1LE1001-1AA4❑-❑❑❑❑-Z F90	2.3	7	3.3	16	0.0044	67	79
1LE1001-1BA2❑-❑❑❑❑-Z F90	2.4	7.4	3.3	16	0.0092	69	81
1LE1001-1CA0❑-❑❑❑❑-Z F90	1.8	6.7	2.9	16	0.02012	68	80
1LE1001-1CA1❑-❑❑❑❑-Z F90	2.2	7.5	3.1	16	0.02353	68	80
1LE1001-1DA2❑-❑❑❑❑-Z F90	2.1	7.4	3.2	16	0.04471	70	82
1LE1001-1DA3❑-❑❑❑❑-Z F90	2.4	7.6	3.4	16	0.05277	70	82
1LE1001-1DA4❑-❑❑❑❑-Z F90	2.9	7.9	3.6	16	0.06085	70	82
4-pole – 1500 rpm at 50 Hz, 1800 rpm at 60 Hz							
1LE1001-1AB4❑-❑❑❑❑-Z F90	2.1	6.9	3.3	16	0.0086	60	72
1LE1001-1AB5❑-❑❑❑❑-Z F90	2	6.9	3.1	16	0.0109	60	72
1LE1001-1BB2❑-❑❑❑❑-Z F90	2.5	7.1	3.2	16	0.014	58	70
1LE1001-1CB0❑-❑❑❑❑-Z F90	2.3	6.9	2.9	16	0.02698	64	76
1LE1001-1CB2❑-❑❑❑❑-Z F90	2.3	6.9	2.9	16	0.03353	64	76
1LE1001-1DB2❑-❑❑❑❑-Z F90	2.2	6.7	2.8	16	0.06495	65	77
1LE1001-1DB4❑-❑❑❑❑-Z F90	2.5	7.3	3	16	0.08281	65	77
6-pole – 1000 rpm at 50 Hz, 1200 rpm at 60 Hz							
1LE1001-1AC4❑-❑❑❑❑-Z F90	2	6.2	2.9	16	0.0113	59	71
1LE1001-1BC2❑-❑❑❑❑-Z F90	2.1	6	3.1	16	0.0139	57	69
1LE1001-1CC0❑-❑❑❑❑-Z F90	1.6	5.6	2.6	13	0.02371	63	75
1LE1001-1CC2❑-❑❑❑❑-Z F90	1.6	5.6	2.5	13	0.02918	63	75
1LE1001-1CC3❑-❑❑❑❑-Z F90	1.9	6.1	2.8	16	0.03673	63	75
1LE1001-1DC2❑-❑❑❑❑-Z F90	1.8	6.3	2.8	16	0.0754	67	79
1LE1001-1DC4❑-❑❑❑❑-Z F90	1.7	6.2	2.7	16	0.0975	67	79
8-pole – 750 rpm at 50 Hz, 900 rpm at 60 Hz							
1LE1001-1AD4❑-❑❑❑❑-Z F90	1.6	4	2.8	13	0.0086	60	72
1LE1001-1AD5❑-❑❑❑❑-Z F90	1.8	4	2.8	13	0.0109	60	72
1LE1001-1BD2❑-❑❑❑❑-Z F90	1.4	4.2	2.4	13	0.014	63	75
1LE1001-1CD0❑-❑❑❑❑-Z F90	1.4	3.6	1.8	10	0.02698	63	75
1LE1001-1CD2❑-❑❑❑❑-Z F90	1.4	5	2.4	10	0.03463	63	75
1LE1001-1DD2❑-❑❑❑❑-Z F90	1.8	4.3	2	13	0.0649	63	75
1LE1001-1DD3❑-❑❑❑❑-Z F90	2.1	4.4	2.1	13	0.0828	63	75
1LE1001-1DD4❑-❑❑❑❑-Z F90	1.9	4.5	2.1	13	0.0982	63	75

Selection and ordering data (continued)

Order No. supplements

Motor type	Frame size	Positions 12 and 13: Voltages (voltage codes)							
		Standard voltages				Further voltages			
		50 Hz				50 Hz			
		230 VΔ/400 VY	400 VΔ/690 VY	500 VY	500 VΔ	220 VΔ/380 VY	380 VΔ/660 VY	415 VY	415 VΔ
		60 Hz				Rated voltage range			
		460 VY	460 VΔ			(210 … 230 VΔ/ 360 … 400 VY) [1]	(360 … 400 VΔ/ 625 … 695 VY) [1]	(395 … 435 VY) [1]	(395 … 435 VΔ) [1]
		see "Selection and ordering data" for outputs at 60 Hz							
		22	**34**	**27**	**40**	**21**	**33**	**23**	**35**
1LE1001-1A..❑-❑...-Z F90	**100 L**	○	○	○	○	✓	✓	✓	✓
1LE1001-1B..❑-❑...-Z F90	**112 M**	○	○	○	○	✓	✓	✓	✓
1LE1001-1C..❑-❑...-Z F90	**132 S/M**	○	○	○	○	✓	✓	✓	✓
1LE1001-1D..❑-❑...-Z F90	**160 M/L**	○	○	○	○	✓	✓	✓	✓

○ Without additional charge
✓ With additional charge

Order other voltages with voltage code **9** in position 12, code **0** in position 13 and the corresponding order code (see "Special versions" in the "Selection and ordering data" under "Voltages", Page 1/54).

Motor type	Frame size	Position 14: Types of construction (type letter)										
		Without flange						With flange (acc. to DIN EN 50347)				
		IM B3 [2] [3]	IM B6 [3]	IM B7 [3]	IM B8 [3]	IM V6 [3]	IM V5 without protec-tive cover [3]	Flange size	IM B5 [3] [4]	IM V1 without protec-tive cover [3]	IM V3 [3]	IM B35
		A	**T**	**U**	**V**	**D**	**C**		**F**	**G**	**H**	**J**
	Order No. sup-plement **-Z** with order code	–	–	–	–	–	–		–	–	–	–
1LE1001-1A...-.❑..-Z F90	**100 L**	❑	❑	❑	❑	❑	❑	**FF 215**	✓	✓	✓	✓
1LE1001-1B...-.❑..-Z F90	**112 M**	❑	❑	❑	❑	❑	❑	**FF 215**	✓	✓	✓	✓
1LE1001-1C...-.❑..-Z F90	**132 S/M**	❑	❑	❑	❑	❑	❑	**FF 265**	✓	✓	✓	✓
1LE1001-1D...-.❑..-Z F90	**160 M/L**	❑	❑	❑	❑	❑	❑	**FF 300**	✓	✓	✓	✓

Motor type	Frame size	Position 14: Types of construction (type letter)									
		With standard flange (acc. to DIN EN 50347)					With standard flange (next larger standerd flange acc. to DIN EN 50347)				
		Flange size	IM B14 [3] [5]	IM V19 [3]	IM V18 without protective cover [3]	IM B34	Flange size	IM B14 [3] [5]	IM V19 [3]	IM V18 without protec-tive cover [3]	IM B34
			K	**L**	**M**	**N**		**K**	**L**	**M**	**N**
	Order No. sup-plement **-Z** with order code		–	–	–	–		**-Z**	**-Z**	**-Z**	**-Z**
								P01	**P01**	**P01**	**P01**
1LE1001-1A...-.❑..-Z F90	**100 L**	**FT 130**	✓	✓	✓	✓	**FT 165**	✓	✓	✓	✓
1LE1001-1B...-.❑..-Z F90	**112 M**	**FT 130**	✓	✓	✓	✓	**FT 165**	✓	✓	✓	✓
1LE1001-1C...-.❑..-Z F90	**132 S/M**	**FT 165**	✓	✓	✓	✓	**FT 215**	✓	✓	✓	✓
1LE1001-1D...-.❑..-Z F90	**160 M/L**	**FT 215**	✓	✓	✓	✓	–	–	–	–	–

❑ Standard version
✓ With extra price

1) A rated voltage range is also specified on the rating plate.

2) The types of construction IM B6/7/8, IM V6 and IM V5 without protective cover are also possible as long as no condensation drainage holes (order code **H03**) and no stamping of these types of construction on the rating plate are required. As standard, the type of construction IM B3 is then stamped on the rating plate.

3) The type of construction is stamped on the rating plate. When ordering with condensation drainage holes (order code **H03**), it is absolutely necessary to specify the type of construction for the exact position of the condensation drainage holes during manufacture.

4) The types of construction IM V3 and IM V1 without protective cover are also possible as long as no condensation drainage holes (order code **H03**) and no stamping of these types of construction on the rating plate are required. As standard, the type of construction IM B5 is then stamped on the rating plate.

5) The types of construction IM V19 and IM V18 without protective cover are also possible as long as no condensation drainage holes (order code **H03**) and no stamping of these types of construction on the rating plate are required. As standard, the type of construction IM B14 is then stamped on the rating plate.

Selection and ordering data (continued)

Motor type	Frame size	Position 15: Motor protection (motor protection letter)					
		Without motor protection	Motor protection with PTC thermistors with 3 embedded temperature sensors for tripping [1]	Motor protection with PTC thermistors with 6 embedded temperature sensors for alarm and tripping [1]	Motor temperature detection with embedded temperature sensor KTY 84-130 [1]	NTC thermistors for tripping	Temperature detectors for tripping [1]
		A	B	C	F	Z	Z
	Order code					Q2A	Q3A
1LE1001-1A...-..□.-Z F90	**100 L**	□	✓	✓	✓	✓	✓
1LE1001-1B...-..□.-Z F90	**112 M**	□	✓	✓	✓	✓	✓
1LE1001-1C...-..□.-Z F90	**132 S/M**	□	✓	✓	✓	✓	✓
1LE1001-1D...-..□.-Z F90	**160 M/L**	□	✓	✓	✓	✓	✓

□ Standard version
✓ With additional charge

Motor type	Frame size	Position 16: Connection box (connection box code)			
		Connection box top [2]	Connection box on RHS [3]	Connection box on LHS [3]	Connection box bottom [3]
		4	5	6	7
1LE1001-1A ...-...□-Z F90	**100 L**	□	✓	✓	✓
1LE1001-1B ...-...□-Z F90	**112 M**	□	✓	✓	✓
1LE1001-1C ...-...□-Z F90	**132 S/M**	□	✓	✓	✓
1LE1001-1D ...-...□-Z F90	**160 M/L**	□	✓	✓	✓

□ Standard version
✓ With additional charge

[1] Evaluation with appropriate tripping unit (see Catalog LV 1) is recommended.

[2] With type of construction, cast feet as standard. Screwed-on feet are available with order code **H01**, see "Special versions".

[3] With type of construction, screwed-on feet as standard.

Self-cooled motors without external fan and fan cover with improved efficiency

Selection and ordering data

Rated output at 50 Hz	Rated output at 60 Hz	Frame size	Operating values at rated output: Rated speed at 50 Hz	Rated torque at 50 Hz	Efficiency Class according to CEMEP	Efficiency at 50 Hz 4/4-load	Efficiency at 50 Hz 3/4-load	Power factor at 50 Hz 4/4-load	Rated current at 400 V, 50 Hz	Order No. For Order No. supplements for voltage, type of construction, motor protection and connection box, see from Page 1/48	Price IM B3 type of construction	Weight IM B3 type of construction approx.
P_{rated} kW	P_{rated} kW	FS	n_{rated} rpm	T_{rated} Nm		η_{rated} %	η_{rated} %	$\cos\varphi_{rated}$	I_{rated} A			m kg
Motor version: temperature class 155 (F), IP55 degree of protection, used acc. to temperature class 130 (B)												
2-pole – 3000 rpm at 50 Hz, 3600 rpm at 60 Hz												
1.2		100 L	2830	4.05		81.4		0.92	2.3	**1PC1002-1AA4❑-❑❑❑❑**		20
1.6		112 M	2925	5.2		83.6		0.93	2.95	**1PC1002-1BA2❑-❑❑❑❑**		25
2.2		132 S	2910	7.24		84		0.94	4	**1PC1002-1CA0❑-❑❑❑❑**		35
3		132 S	2920	9.8		87		0.93	5.35	**1PC1002-1CA1❑-❑❑❑❑**		40
4.4		160 M	2830	15		89.6		0.9	7.9	**1PC1002-1DA2❑-❑❑❑❑**		60
6		160 M	2935	20		90		0.91	10.6	**1PC1002-1DA3❑-❑❑❑❑**		68
7.4		160 L	2930	24		90.6		0.92	12.9	**1PC1002-1DA4❑-❑❑❑❑**		78
4-pole – 1500 rpm at 50 Hz, 1800 rpm at 60 Hz												
0.88		100 L	1420	5.92		80.7		0.88	1.8	**1PC1002-1AB4❑-❑❑❑❑**		18
1.2		100 L	1420	8.06		83		0.89	2.35	**1PC1002-1AB5❑-❑❑❑❑**		22
1.6		112 M	1430	11		83.7		0.89	3.1	**1PC1002-1BB2❑-❑❑❑❑**		27
2.2		132 S	1450	14.53		85.8		0.89	4.15	**1PC1002-1CB0❑-❑❑❑❑**		38
3		132 M	1450	19.8		87.2		0.89	5.58	**1PC1002-1CB2❑-❑❑❑❑**		44
4.4		160 M	1460	29		88		0.88	8.2	**1PC1002-1DB2❑-❑❑❑❑**		62
6		160 L	1460	39		89.5		0.89	10.9	**1PC1002-1DB4❑-❑❑❑❑**		73
6-pole – 1000 rpm at 50 Hz, 1200 rpm at 60 Hz												
0.6		100 L	935	6.12		76.1		0.81	1.4	**1PC1002-1AC4❑-❑❑❑❑**		19
0.88		112 M	930	9		79		0.82	1.96	**1PC1002-1BC2❑-❑❑❑❑**		25
1.2		132 S	950	12		80.7		0.83	2.58	**1PC1002-1CC0❑-❑❑❑❑**		34
1.6		132 M	950	16		83.2		0.83	3.35	**1PC1002-1CC2❑-❑❑❑❑**		39
2.2		132 M	950	22.13		85.1		0.83	4.5	**1PC1002-1CC3❑-❑❑❑❑**		48
3		160 M	970	30		86.5		0.81	6.2	**1PC1002-1DC2❑-❑❑❑❑**		72
4.4		160 L	970	43		88		0.81	8.9	**1PC1002-1DC4❑-❑❑❑❑**		92
8-pole – 750 rpm at 50 Hz, 900 rpm at 60 Hz												
0.3		100 L	710	4.05		66.3		0.67	0.97	**1PC1002-1AD4❑-❑❑❑❑**		17
0.44		100 L	705	6		71		0.69	1.3	**1PC1002-1AD5❑-❑❑❑❑**		22
0.6		112 M	695	8.2		75.2		0.72	1.6	**1PC1002-1BD2❑-❑❑❑❑**		25
0.88		132 S	720	11.66		80.6		0.71	2.2	**1PC1002-1CD0❑-❑❑❑❑**		37
1.2		132 M	720	16		81.5		0.72	2.95	**1PC1002-1CD2❑-❑❑❑❑**		44
1.6		160 M	730	21		82		0.74	3.8	**1PC1002-1DD2❑-❑❑❑❑**		60
2.2		160 M	730	29		85		0.74	5.1	**1PC1002-1DD3❑-❑❑❑❑**		72
3		160 L	730	39		86		0.74	6.8	**1PC1002-1DD4❑-❑❑❑❑**		91

Order No. supplements, see from Page 1/48.

Selection and ordering data (continued)

Order No.	Locked-rotor torque with direct starting as multiple of rated torque	Locked-rotor current	Breaddown torque	Torque class	Moment of inertia	Noise at rated output	
						Measuring-surface sound pressure level at 50 Hz	Sound pressure level at 50 Hz
	T_{LR}/T_{rated}	I_{LR}/I_{rated}	T_B/T_{rated}	CL	J kgm^2	L_{pfA} dB(A)	L_{WA} dB(A)
Motor version: temperature class 155 (F), IP55 degree of protection, used acc. to temperature class 130 (B)							
2-pole – 3000 rpm at 50 Hz, 3600 rpm at 60 Hz							
1PC1002-1AA4❑-❑❑❑❑	3	6	3	16	0.0034	67	79
1PC1002-1BA2❑-❑❑❑❑	2.3	7.2	3	13	0.0067	69	81
1PC1002-1CA0❑-❑❑❑❑	1.7	5.3	2.3	10	0.0127	62	74
1PC1002-1CA1❑-❑❑❑❑	2	6.3	2.8	13	0.0160	62	74
1PC1002-1DA2❑-❑❑❑❑	2.1	6.3	2.9	13	0.0297	60	72
1PC1002-1DA3❑-❑❑❑❑	2.5	7	3.1	16	0.0362	60	72
1PC1002-1DA4❑-❑❑❑❑	2.5	7	3.1	16	0.0439	60	72
4-pole – 1500 rpm at 50 Hz, 1800 rpm at 60 Hz							
1PC1002-1AB4❑-❑❑❑❑	2	5.1	2.2	13	0.0059	60	72
1PC1002-1AB5❑-❑❑❑❑	2.2	5.4	2.4	13	0.0078	60	72
1PC1002-1BB2❑-❑❑❑❑	1.9	5.4	2.2	13	0.0102	58	70
1PC1002-1CB0❑-❑❑❑❑	2.2	5.7	2.6	13	0.0186	64	76
1PC1002-1CB2❑-❑❑❑❑	2.4	6.4	2.7	16	0.0237	64	76
1PC1002-1DB2❑-❑❑❑❑	2.1	7	2.8	13	0.0439	64	76
1PC1002-1DB4❑-❑❑❑❑	2.4	7.5	3	16	0.0562	64	76
6-pole – 1000 rpm at 50 Hz, 1200 rpm at 60 Hz							
1PC1002-1AC4❑-❑❑❑❑	1.8	4.1	2	10	0.0065	59	71
1PC1002-1BC2❑-❑❑❑❑	2.1	4.2	2.2	13	0.0092	55	67
1PC1002-1CC0❑-❑❑❑❑	1.7	4.5	2.2	10	0.0167	63	75
1PC1002-1CC2❑-❑❑❑❑	1.9	4.6	2.2	13	0.0212	63	75
1PC1002-1CC3❑-❑❑❑❑	2.2	5	2.5	13	0.0274	63	75
1PC1002-1DC2❑-❑❑❑❑	2.1	6	2.7	13	0.0563	67	79
1PC1002-1DC4❑-❑❑❑❑	2.1	6.4	2.8	13	0.0780	67	79
8-pole – 750 rpm at 50 Hz, 900 rpm at 60 Hz							
1PC1002-1AD4❑-❑❑❑❑	1.8	3.3	2.2	10	0.0056	60	72
1PC1002-1AD5❑-❑❑❑❑	1.8	3.4	2.2	10	0.0078	60	72
1PC1002-1BD2❑-❑❑❑❑	1.7	3.3	1.9	10	0.0094	63	75
1PC1002-1CD0❑-❑❑❑❑	1.6	4.2	2.3	10	0.0186	63	75
1PC1002-1CD2❑-❑❑❑❑	1.7	4.2	2.3	10	0.0237	63	75
1PC1002-1DD2❑-❑❑❑❑	1.7	4.9	2.3	10	0.0439	63	75
1PC1002-1DD3❑-❑❑❑❑	1.5	5	2.3	10	0.0562	63	75
1PC1002-1DD4❑-❑❑❑❑	1.8	5.4	2.5	10	0.0772	63	75

Selection and ordering data (continued)

Order No. supplements

Motor type	Frame size	Positions 12 and 13: Voltages (voltage codes)							
		Standard voltages				Further voltages			
		50 Hz				50 Hz			
		230 VΔ/400 VY	400 VΔ/690 VY	500 VY	500 VΔ	220 VΔ/380 VY	380 VΔ/660 VY	415 VY	415 VΔ
		60 Hz				Rated voltage range			
		460 VY	460 VΔ			(210 … 230 VΔ/ 360 … 400 VY) [1]	(360 … 400 VΔ/ 625 … 695 VY) [1]	(395 … 435 VY) [1]	(395 … 435 VΔ) [1]
		see "Selection and ordering data" for outputs at 60 Hz							
		22	**34**	**27**	**40**	**21**	**33**	**23**	**35**
1PC1002-1A..□-□...	**100 L**	○	○	○	○	✓	✓	✓	✓
1PC1002-1B..□-□...	**112 M**	○	○	○	○	✓	✓	✓	✓
1PC1002-1C..□-□...	**132 S/M**	○	○	○	○	✓	✓	✓	✓
1PC1002-1D..□-□...	**160 M/L**	○	○	○	○	✓	✓	✓	✓

○ Without additional charge
✓ With additional charge

Order other voltages with voltage code **9** in position 12, code **0** in position 13 and the corresponding order code (see "Special versions" in the "Selection and ordering data" under "Voltages", Page 1/54).

Motor type	Frame size	Position 14: Type of construction (type letter)										
		With flange						With flange (acc. to DIN EN 50347)				
		IM B3 [2] [3]	IM B6 [3]	IM B7 [3]	IM B8 [3]	IM V6 [3]	IM V5 without protective cover [3]	Flange size	IM B5 [3] [4]	IM V1 without protective cover [3]	IM V3 [3]	IM B35
		A	**T**	**U**	**V**	**D**	**C**		**F**	**G**	**H**	**J**
	Order No. supplement **-Z** with order code	–	–	–	–	–	–		–	–	–	–
1PC1002-1A...-.□..	**100 L**	□	□	□	□	□	□	**FF 215**	✓	✓	✓	✓
1PC1002-1B...-.□..	**112 M**	□	□	□	□	□	□	**FF 215**	✓	✓	✓	✓
1PC1002-1C...-.□..	**132 S/M**	□	□	□	□	□	□	**FF 265**	✓	✓	✓	✓
1PC1002-1D...-.□..	**160 M/L**	□	□	□	□	□	□	**FF 300**	✓	✓	✓	✓

Motor type	Frame size	Position 14: Type of construction (type letter)									
		With standard flange (acc. to DIN EN 50347)					With standard flange (next larger standerd flange acc. to DIN EN 50347)				
		Flange size	IM B14 [3] [5]	IM V19 [3]	IM V18 without protective cover [3]	IM B34	Flange size	IM B14 [3] [5]	IM V19 [3]	IM V18 without protective cover [3]	IM B34
			K	**L**	**M**	**N**		**K**	**L**	**M**	**N**
	Order No. supplement **-Z** with order code		–	–	–	–		**-Z** **P01**	**-Z** **P01**	**-Z** **P01**	**-Z** **P01**
1PC1002-1A...-.□..	**100 L**	**FT 130**	✓	✓	✓	✓	**FT 165**	✓	✓	✓	✓
1PC1002-1B...-.□..	**112 M**	**FT 130**	✓	✓	✓	✓	**FT 165**	✓	✓	✓	✓
1PC1002-1C...-.□..	**132 S/M**	**FT 165**	✓	✓	✓	✓	**FT 215**	✓	✓	✓	✓
1PC1002-1D...-.□..	**160 M/L**	**FT 215**	✓	✓	✓	✓	–	–	–	–	–

□ Standard version
✓ With additional charge

1) A rated voltage range is also specified on the rating plate.

2) The types of construction IM B6/7/8, IM V6 and IM V5 without protective cover are also possible as long as no condensation drainage holes (order code **H03**) and no stamping of these types of construction on the rating plate are required. As standard, the type of construction IM B3 is then stamped on the rating plate.

3) The type of construction is stamped on the rating plate. When ordering with condensation drainage holes (order code **H03**), it is absolutely necessary to specify the type of construction for the exact position of the condensation drainage holes during manufacture.

4) The types of construction IM V3 and IM V1 without protective cover are also possible as long as no condensation drainage holes (order code **H03**) and no stamping of these types of construction on the rating plate are required. As standard, the type of construction IM B5 is then stamped on the rating plate.

5) The types of construction IM V19 and IM V18 without protective cover are also possible as long as no condensation drainage holes (order code **H03**) and no stamping of these types of construction on the rating plate are required. As standard, the type of construction IM B14 is then stamped on the rating plate.

Selection and ordering data (continued)

Motor type	Frame size	Position 15: Motor protection (motor protection letter)					
		Without motor protection	Motor protection with PTC thermistors with 3 embedded temperature sensors for tripping [1]	Motor protection with PTC thermistors with 6 embedded temperature sensors for alarm and tripping [1]	Motor temperature detection with embedded temperature sensor KTY 84-130 [1]	NTC thermistors for tripping	Temperature detectors for tripping [1]
		A	**B**	**C**	**F**	**Z**	**Z**
	Order code					**Q2A**	**Q3A**
1PC1002-1A...-..❑.	**100 L**	❑	✓	✓	✓	✓	✓
1PC1002-1B...-..❑.	**112 M**	❑	✓	✓	✓	✓	✓
1PC1002-1C...-..❑.	**132 S/M**	❑	✓	✓	✓	✓	✓
1PC1002-1D...-..❑.	**160 M/L**	❑	✓	✓	✓	✓	✓

❑ Standard version
✓ With additional charge

Motor type	Frame size	Position 16: Connection box (connection box code)			
		Connection box top [2]	Connection box on RHS [3]	Connection box on LHS [3]	Connection box bottom [3]
		4	**5**	**6**	**7**
1PC1002-1A...-...❑	**100 L**	❑	✓	✓	✓
1PC1002-1B...-...❑	**112 M**	❑	✓	✓	✓
1PC1002-1C...-...❑	**132 S/M**	❑	✓	✓	✓
1PC1002-1D...-...❑	**160 M/L**	❑	✓	✓	✓

❑ Standard version
✓ With additional charge

[1] Evaluation with appropriate tripping unit (see Catalog LV 1) is recommended.

[2] With type of construction, cast feet as standard. Screwed-on feet are available with order code **H01**, see "Special versions".

[3] With type of construction, screwed-on feet as standard.

Self-cooled motors without external fan and fan cover with high efficiency

Selection and ordering datal

Rated output at 50 Hz	Rated output at 60 Hz	Frame size	Operating values at rated output: Rated speed at 50 Hz	Rated torque at 50 Hz	Efficiency Class according to CEMEP	Efficiency at 50 Hz 4/4-load	Efficiency at 50 Hz 3/4-load	Power factor at 50 Hz 4/4-load	Rated current at 400 V, 50 Hz	Order No. For Order No. supplements for voltage, type of construction, motor protection and connection box, see from Page 1/52	Price IM B3 type of construction	Weight IM B3 type of construction approx.
P_{rated} kW	P_{rated} kW	FS	n_{rated} rpm	T_{rated} Nm		η_{rated} %	η_{rated} %	$\cos\varphi_{rated}$	I_{rated} A			m kg
Motor version: temperature class 155 (F), IP55 degree of protection, used acc. to temperature class 130 (B)												
2-pole – 3000 rpm at 50 Hz, 3600 rpm at 60 Hz												
1.4		100 L	2920	4.6		87.5		0.88	2.6	**1PC1001-1AA4❑-❑❑❑❑**		21
1.6		112 M	2955	5.2		82		0.9	3.15	**1PC1001-1BA2❑-❑❑❑❑**		27
3.1		132 S	2955	10		91		0.89	5.5	**1PC1001-1CA0❑-❑❑❑❑**		39
4.3		132 S	2955	14		91.5		0.9	7.5	**1PC1001-1CA1❑-❑❑❑❑**		43
6.3		160 M	2955	20		94.5		0.89	10.8	**1PC1001-1DA2❑-❑❑❑❑**		67
6.5		160 M	2960	21		91.5		0.9	11.4	**1PC1001-1DA3❑-❑❑❑❑**		75
9		160 L	2960	29		93.5		0.91	15.2	**1PC1001-1DA4❑-❑❑❑❑**		84
4-pole – 1500 rpm at 50 Hz, 1800 rpm at 60 Hz												
1.1		100 L	1460	7.2		86		0.83	2.2	**1PC1001-1AB4❑-❑❑❑❑**		21
1.5		100 L	1460	9.8		86		0.84	3	**1PC1001-1AB5❑-❑❑❑❑**		25
2		112 M	1460	13		88.5		0.83	3.95	**1PC1001-1BB2❑-❑❑❑❑**		29
2.6		132 S	1465	17		89.5		0.83	5.1	**1PC1001-1CB0❑-❑❑❑❑**		42
4		132 M	1465	26		89.5		0.84	7.7	**1PC1001-1CB2❑-❑❑❑❑**		49
6		160 M	1470	39		91		0.87	11	**1PC1001-1DB2❑-❑❑❑❑**		71
6.2		160 L	1480	40		91.5		0.86	11.4	**1PC1001-1DB4❑-❑❑❑❑**		83
6-pole – 1000 rpm at 50 Hz, 1200 rpm at 60 Hz												
0.85		100 L	960	8.5		85		0.75	1.92	**1PC1001-1AC4❑-❑❑❑❑**		25
1.2		112 M	960	12		83.5		0.75	2.75	**1PC1001-1BC2❑-❑❑❑❑**		29
1.5		132 S	970	15		86.5		0.77	3.25	**1PC1001-1CC0❑-❑❑❑❑**		38
2.5		132 M	970	25		87		0.79	5.3	**1PC1001-1CC2❑-❑❑❑❑**		43
2.7		132 M	975	26		88		0.77	5.8	**1PC1001-1CC3❑-❑❑❑❑**		52
5		160 M	975	49		89		0.77	10.6	**1PC1001-1DC2❑-❑❑❑❑**		77
6.5		160 L	975	64		89.5		0.8	13.2	**1PC1001-1DC4❑-❑❑❑❑**		93
8-pole – 750 rpm at 50 Hz, 900 rpm at 60 Hz												
0.37		100 L	730	4.8		72.5		0.58	1.28	**1PC1001-1AD4❑-❑❑❑❑**		21
0.55		100 L	720	7.3		73		0.62	1.76	**1PC1001-1AD5❑-❑❑❑❑**		25
0.75		112 M	720	9.9		77.5		0.66	2.1	**1PC1001-1BD2❑-❑❑❑❑**		29
1.1		132 S	730	14		82.5		0.65	2.95	**1PC1001-1CD0❑-❑❑❑❑**		41
1.5		132 M	730	20		84		0.68	3.8	**1PC1001-1CD2❑-❑❑❑❑**		49
2.4		160 M	730	31		88.5		0.7	5.6	**1PC1001-1DD2❑-❑❑❑❑**		69
3.3		160 M	730	43		88		0.7	7.7	**1PC1001-1DD3❑-❑❑❑❑**		82
4.6		160 L	730	60		88		0.7	10.8	**1PC1001-1DD4❑-❑❑❑❑**		94

Order No. supplements, see from Page 1/52.

Selection and ordering data (continued)

Order No.	Locked-rotor torque with direct starting as multiple of rated torque	Locked-rotor current with direct starting as multiple of rated current	Breaddown torque with direct starting as multiple of rated torque	Torque class	Moment of inertia	Noise at rated output: Measuring-surface sound pressure level at 50 Hz	Noise at rated output: Sound pressure level at 50 Hz
	T_{LR}/T_{rated}	I_{LR}/I_{rated}	T_B/T_{rated}	CL	J kgm^2	L_{pfA} dB(A)	L_{WA} dB(A)
Motor version: temperature class 155 (F), IP55 degree of protection, used acc. to temperature class 130 (B)							
2-pole – 3000 rpm at 50 Hz, 3600 rpm at 60 Hz							
1PC1001-1AA4❑-❑❑❑❑	2.1	8.3	3.6	13	0.0044	67	79
1PC1001-1BA2❑-❑❑❑❑	2.5	9.5	3.5	16	0.0092	69	81
1PC1001-1CA0❑-❑❑❑❑	1.9	7.1	2.9	13	0.0201	62	74
1PC1001-1CA1❑-❑❑❑❑	1.9	7.6	2.9	13	0.0235	62	74
1PC1001-1DA2❑-❑❑❑❑	1.8	7.1	3	10	0.0447	60	72
1PC1001-1DA3❑-❑❑❑❑	2.3	8.7	3.3	13	0.0528	60	72
1PC1001-1DA4❑-❑❑❑❑	2.4	8.7	3.2	16	0.0608	60	72
4-pole – 1500 rpm at 50 Hz, 1800 rpm at 60 Hz							
1PC1001-1AB4❑-❑❑❑❑	2.1	7.6	3.3	13	0.0086	60	72
1PC1001-1AB5❑-❑❑❑❑	2.2	7.8	3.5	13	0.0109	60	72
1PC1001-1BB2❑-❑❑❑❑	2.3	7.4	3.1	13	0.0140	58	70
1PC1001-1CB0❑-❑❑❑❑	2.2	7.5	2.8	13	0.0270	64	76
1PC1001-1CB2❑-❑❑❑❑	2.1	7.3	2.9	13	0.0335	64	76
1PC1001-1DB2❑-❑❑❑❑	1.8	6	2.5	10	0.0649	64	76
1PC1001-1DB4❑-❑❑❑❑	2.6	8.6	3.5	16	0.0828	64	76
6-pole – 1000 rpm at 50 Hz, 1200 rpm at 60 Hz							
1PC1001-1AC4❑-❑❑❑❑	1.7	5.5	2.6	10	0.0113	59	71
1PC1001-1BC2❑-❑❑❑❑	1.7	5.7	2.7	10	0.0139	55	67
1PC1001-1CC0❑-❑❑❑❑	1.4	5.5	2.4	7	0.0237	63	75
1PC1001-1CC2❑-❑❑❑❑	1.4	5.4	2.3	7	0.0292	63	75
1PC1001-1CC3❑-❑❑❑❑	1.9	6.8	3	13	0.0367	63	75
1PC1001-1DC2❑-❑❑❑❑	1.6	6	2.6	10	0.0754	67	79
1PC1001-1DC4❑-❑❑❑❑	1.6	6	2.6	10	0.0975	67	79
8-pole – 750 rpm at 50 Hz, 900 rpm at 60 Hz							
1PC1001-1AD4❑-❑❑❑❑	1.5	4.5	2.7	10	0.0086	60	72
1PC1001-1AD5❑-❑❑❑❑	1.6	4.4	2.5	10	0.0109	60	72
1PC1001-1BD2❑-❑❑❑❑	1.3	4.4	2.4	7	0.0140	63	75
1PC1001-1CD0❑-❑❑❑❑	1.2	4.5	2.1	7	0.0270	63	75
1PC1001-1CD2❑-❑❑❑❑	1.2	4.7	2.3	7	0.0346	63	75
1PC1001-1DD2❑-❑❑❑❑	1.6	4.4	1.8	10	0.0649	63	75
1PC1001-1DD3❑-❑❑❑❑	1.6	4.6	1.8	10	0.0828	63	75
1PC1001-1DD4❑-❑❑❑❑	1.5	4.5	1.8	10	0.0982	63	75

1

Selection and ordering data (continued)

Order No. supplements

Motor type	Frame size	Positions 12 and 13: Voltages (voltage codes)							
		Standard voltages				Further voltages			
		50 Hz				50 Hz			
		230 VΔ/400 VY	400 VΔ/690 VY	500 VY	500 VΔ	220 VΔ/380 VY	380 VΔ/660 VY	415 VY	415 VΔ
		60 Hz				Rated voltage range			
		460 VY	460 VΔ			(210 … 230 VΔ/ 360 … 400 VY) [1]	(360 … 400 VΔ/ 625 … 695 VY) [1]	(395 … 435 VY) [1]	(395 … 435 VΔ) [1]
		see "Selection and ordering data" for outputs at 60 Hz							
		22	**34**	**27**	**40**	**21**	**33**	**23**	**35**
1PC1001-1A..□-□...	**100 L**	○	○	○	○	✓	✓	✓	✓
1PC1001-1B..□-□...	**112 M**	○	○	○	○	✓	✓	✓	✓
1PC1001-1C..□-□...	**132 S/M**	○	○	○	○	✓	✓	✓	✓
1PC1001-1D..□-□...	**160 M/L**	○	○	○	○	✓	✓	✓	✓

○ Without additional charge
✓ With additional charge

Order other voltages with voltage code **9** in position 12, code **0** in position 13 and the corresponding order code (see "Special versions" in the "Selection and ordering data" under "Voltages", Page 1/54).

Motor type	Frame size	Position 14: Type of construction (type letter)										
		With flange						With flange (acc. to DIN EN 50347)				
		IM B3 [2] [3]	IM B6 [3]	IM B7 [3]	IM B8 [3]	IM V6 [3]	IM V5 without protective cover [3]	Flange size	IM B5 [3] [4]	IM V1 without protective cover [3]	IM V3 [3]	IM B35
		A	**T**	**U**	**V**	**D**	**C**		**F**	**G**	**H**	**J**
	Order No. supplement **-Z** with order code	–	–	–	–	–	–		–	–	–	–
1PC1001-1A...-.□..	**100 L**	□	□	□	□	□	□	**FF 215**	✓	✓	✓	✓
1PC1001-1B...-.□..	**112 M**	□	□	□	□	□	□	**FF 215**	✓	✓	✓	✓
1PC1001-1C...-.□..	**132 S/M**	□	□	□	□	□	□	**FF 265**	✓	✓	✓	✓
1PC1001-1D...-.□..	**160 M/L**	□	□	□	□	□	□	**FF 300**	✓	✓	✓	✓

Motor type	Frame size	Position 14: Type of construction (type letter)									
		With standard flange (acc. to DIN EN 50347)					With standard flange (next larger standerd flange acc. to DIN EN 50347)				
		Flange size	IM B14 [3] [5]	IM V19 [3]	IM V18 without protective cover [3]	IM B34	Flange size	IM B14 [3] [5]	IM V19 [3]	IM V18 without protective cover [3]	IM B34
			K	**L**	**M**	**N**		**K**	**L**	**M**	**N**
	Order No. supplement **-Z** with order code		–	–	–	–		**-Z** **P01**	**-Z** **P01**	**-Z** **P01**	**-Z** **P01**
1PC1001-1A...-.□..	**100 L**	**FT 130**	✓	✓	✓	✓	**FT 165**	✓	✓	✓	✓
1PC1001-1B...-.□..	**112 M**	**FT 130**	✓	✓	✓	✓	**FT 165**	✓	✓	✓	✓
1PC1001-1C...-.□..	**132 S/M**	**FT 165**	✓	✓	✓	✓	**FT 215**	✓	✓	✓	✓
1PC1001-1D...-.□..	**160 M/L**	**FT 215**	✓	✓	✓	✓	–	–	–	–	–

□ Standard version
✓ With additional charge

1) A rated voltage range is also specified on the rating plate.

2) The types of construction IM B6/7/8, IM V6 and IM V5 without protective cover are also possible as long as no condensation drainage holes (order code **H03**) and no stamping of these types of construction on the rating plate are required. As standard, the type of construction IM B3 is then stamped on the rating plate.

3) The type of construction is stamped on the rating plate. When ordering with condensation drainage holes (order code **H03**), it is absolutely necessary to specify the type of construction for the exact position of the condensation drainage holes during manufacture.

4) The types of construction IM V3 and IM V1 without protective cover are also possible as long as no condensation drainage holes (order code **H03**) and no stamping of these types of construction on the rating plate are required. As standard, the type of construction IM B5 is then stamped on the rating plate.

5) The types of construction IM V19 and IM V18 without protective cover are also possible as long as no condensation drainage holes (order code **H03**) and no stamping of these types of construction on the rating plate are required. As standard, the type of construction IM B14 is then stamped on the rating plate.

Selection and ordering data (continued)

Motor type	Frame size	Position 15: Motor protection (motor protection letter)					
		Without motor protection	Motor protection with PTC thermistors with 3 embedded temperature sensors for tripping [1]	Motor protection with PTC thermistors with 6 embedded temperature sensors for alarm and tripping [1]	Motor temperature detection with embedded temperature sensor KTY 84-130 [1]	NTC thermistors for tripping	Temperature detectors for tripping [1]
		A	**B**	**C**	**F**	**Z**	**Z**
	Order code					**Q2A**	**Q3A**
1PC1001-1A...-..❑.	**100 L**	❑	✓	✓	✓	✓	✓
1PC1001-1B...-..❑.	**112 M**	❑	✓	✓	✓	✓	✓
1PC1001-1C...-..❑.	**132 S/M**	❑	✓	✓	✓	✓	✓
1PC1001-1D...-..❑.	**160 M/L**	❑	✓	✓	✓	✓	✓

❑ Standard version
✓ With additional charge

Motor type	Frame size	Position 16: Connection box (connection box code)			
		Connection box top [2]	Connection box on RHS [3]	Connection box on LHS [3]	Connection box bottom [3]
		4	**5**	**6**	**7**
1PC1001-1A...-...❑	**100 L**	❑	✓	✓	✓
1PC1001-1B...-...❑	**112 M**	❑	✓	✓	✓
1PC1001-1C...-...❑	**132 S/M**	❑	✓	✓	✓
1PC1001-1D...-...❑	**160 M/L**	❑	✓	✓	✓

❑ Standard version
✓ With additional charge

[1] Evaluation with appropriate tripping unit (see Catalog LV 1) is recommended.

[2] With type of construction, cast feet as standard. Screwed-on feet are available with order code **H01**, see "Special versions".

[3] With type of construction, screwed-on feet as standard.

Selection and ordering data

Voltages

Additional order codes for other voltages or voltage codes (without **-Z** supplement)

Not possible for General Line motors with shorter delivery time.

For some non-standard voltages at 50 or 60 Hz, order codes are specified. They are ordered by specifying the code digit **9** for voltage in the 12th position and **0** in the 13th position of the Order No. and the appropriate order code.

Special versions	Voltage code 12th / 13th position of the Order No.		Additional identification code with order code and plain text if required	Motor type frame size 56	63	71	80	90	100	112	132	160
Self-ventilated energy-saving motors with improved efficiency												
Self-ventilated energy-saving motors with high efficiency												
Self-ventilated motors with increased output and improved efficiency												
Self-ventilated motors with increased output and high efficiency												
Forced-air cooled motors without external fan and fan cover with improved efficiency												
Forced-air cooled motors without external fan and fan cover with high efficiency												
Self-cooled motors without external fan and fan cover with improved efficiency												
Self-cooled motors without external fan and fan cover with high efficiency												
									1LE1/1PC1 (Aluminum)			
Voltage at 60 Hz												
220 VΔ/380 VY; 50 Hz output	**9**	**0**	**M2A**						✓	✓	✓	✓
220 VΔ/380 VY; 60 Hz output	**9**	**0**	**M1A**						✓	✓	✓	✓
380 VΔ/660 VY; 50 Hz output	**9**	**0**	**M2B**						✓	✓	✓	✓
380 VΔ/660 VY; 60 Hz output	**9**	**0**	**M1B**						✓	✓	✓	✓
440 VY; 50 Hz output	**9**	**0**	**M2C**						✓	✓	✓	✓
440 VY; 60 Hz output	**9**	**0**	**M1C**						✓	✓	✓	✓
440 VΔ; 50 Hz output	**9**	**0**	**M2D**						✓	✓	✓	✓
440 VΔ; 60 Hz output	**9**	**0**	**M1D**						✓	✓	✓	✓
460 VY; 50 Hz output	**9**	**0**	**M2E**						✓	✓	✓	✓
460 VY; 60 Hz output	**9**	**0**	**M1E**						○	○	○	○
460 VΔ; 50 Hz output	**9**	**0**	**M2F**						✓	✓	✓	✓
460 VΔ; 60 Hz output	**9**	**0**	**M1F**						○	○	○	○
575 VY; 50 Hz output	**9**	**0**	**M2G**						✓	✓	✓	✓
575 VY; 60 Hz output	**9**	**0**	**M1G**						✓	✓	✓	✓
575 VΔ; 50 Hz output	**9**	**0**	**M2H**						✓	✓	✓	✓
575 VΔ; 60 Hz output	**9**	**0**	**M1H**						✓	✓	✓	✓
Non-standard voltages and / or frequencies												
Non-standard winding for voltages between 200 V and 690 V (voltages outside this range are available on request) [1]	**9**	**0**	**M1Y**						✓	✓	✓	✓

○ Without additional charge
✓ With additional charge

[1] Plain text must be specified in the order: voltage, frequency, circuit, required rated output in kW.

Options

Options or order codes (supplement **-Z** is required)

Not possible for General Line motors with shorter delivery time.

Special versions	Additional identification code **-Z** with order code and plain text if required	Motor type frame size 56	63	71	80	90	100	112	132	160
Self-ventilated energy-saving motors with improved efficiency **Self-ventilated energy-saving motors with high efficiency** **Self-ventilated motors with increased output and improved efficiency** **Self-ventilated motors with increased output and high efficiency**										
							1LE1 (Aluminum)			
Motor connection and connection box										
One cable gland, metal	**R15**						✓	✓	✓	✓
Rotation of the connection box through 90°, entry from DE	**R10**						○	○	○	○
Rotation of the connection box through 90°, entry from NDE	**R11**						○	○	○	○
Rotation of the connection box through 180°	**R12**						○	○	○	○
Larger connection box	**R50**						✓	✓	✓	✓
Reduction piece for M cable gland in accordance with British standard, both cable entries mounted [1)]	**R30**						✓	✓	✓	✓
External earthing	**H04**						✓	✓	✓	✓
3 cables protruding, 0.5 m long [2)3)]	**R20**						✓	✓	✓	✓
3 cables protruding, 1.5 m long [2)3)]	**R21**						✓	✓	✓	✓
6 cables protruding, 0.5 m long [2)]	**R22**						✓	✓	✓	✓
6 cables protruding, 1.5 m long [2)]	**R23**						✓	✓	✓	✓
6 cables protruding, 3 m long [2)]	**R24**						✓	✓	✓	✓
Connection box on NDE [4)]	**H08**						✓	✓	✓	✓
Windings and insulation										
Temperature class 155 (F), used acc. to 155 (F), with service factor (SF)	**N01**						✓	✓	✓	✓
Temperature class 155 (F), used acc. to 155 (F), with increased output	**N02**						✓	✓	✓	✓
Temperature class 155 (F), used acc. to 155 (F), with increased coolant temperature	**N03**						✓	✓	✓	✓
Temperature class 180 (H) at rated power and max. CT 60 °C [5)]	**N11**						✓	✓	✓	✓
Increased air humidity/ temperature with 30 to 60 g water per m^3 of air	**N20**						✓	✓	✓	✓
Temperature class 155 (F), used acc. to 130 (B), coolant temperature 45 °C, derating approx. 4 %	**N05**						✓	✓	✓	✓

For legend and footnotes, see Page 1/59.

Special versions

Special versions	Additional identification code **-Z** with order code and plain text if required	Motor type frame size 56	63	71	80	90	100	112	132	160
Self-ventilated energy-saving motors with improved efficiency **Self-ventilated energy-saving motors with high efficiency** **Self-ventilated motors with increased output and improved efficiency** **Self-ventilated motors with increased output and high efficiency**										
							1LE1 (Aluminum)			
Windings and insulation (continued)										
Temperature class 155 (F), used acc. to 130 (B), coolant temperature 50 °C, derating approx. 8 %	**N06**						✓	✓	✓	✓
Temperature class 155 (F), used acc. to 130 (B), coolant temperature 55 °C, derating approx. 13 %	**N07**						✓	✓	✓	✓
Temperature class 155 (F), used acc. to 130 (B), coolant temperature 60 °C, derating approx. 18 %	**N08**						✓	✓	✓	✓
Increased air humidity/ temperature with 60 to 100 g water per m^3 of air	**N21**						✓	✓	✓	✓
Temperature class 155 (F), used acc. to 155 (F), other requirements	**Y52** • and identification code						✓	✓	✓	✓
Colors and paint finish										
Special finish in RAL 7030 stone gray							◘	◘	◘	◘
Special finish in other standard RAL colors : RAL 1002, 1013, 1015, 1019, 2003, 2004, 3000, 3007, 5007, 5009, 5010, 5012, 5015, 5017, 5018, 5019, 6011, 6019, 6021, 7000, 7001, 7004, 7011, 7016, 7022, 7031, 7032, 7033, 7035, 9001, 9002, 9005, Page 0/101	**Y54** • and special finish RAL….						✓	✓	✓	✓
Special finish in special RAL colors: for RAL colors, see "Special finish in special RAL colors", Page 0/101	**Y51** • and special finish RAL….						✓	✓	✓	✓
Special finish sea air resistant	**S03**						O. R.	O. R.	O. R.	O. R.
Unpainted (only cast iron parts primed)	**S00**						○	○	○	○
Unpainted, only primed	**S01**						✓	✓	✓	✓
Modular technology – Basic versions [6]										
Mounting of separately driven fan	**F70**						✓	✓	✓	✓
Mounting of brake [7]	**F01**						✓	✓	✓	✓
Mounting of 1XP8012-10 (HTL) rotary pulse encoder [8]	**G01**						✓	✓	✓	✓
Mounting of 1XP8012-20 (TTL) rotary pulse encoder [8]	**G02**						✓	✓	✓	✓
Modular technology – Additional versions										
Brake supply voltage 24 V DC	**F10**						✓	✓	✓	✓
Brake supply voltage 230 V AC, 50/60 Hz	**F11**						○	○	○	○
Brake supply voltage 400 V AC, 50/60 Hz	**F12**						✓	✓	✓	✓
Mechanical manual brake release with lever (no locking)	**F50**						✓	✓	✓	✓

For legend and footnotes, see Page 1/59.

Special versions	Additional identification code **-Z** with order code and plain text if required	Motor type frame size 56	63	71	80	90	100	112	132	160
Self-ventilated energy-saving motors with improved efficiency **Self-ventilated energy-saving motors with high efficiency** **Self-ventilated motors with increased output and improved efficiency** **Self-ventilated motors with increased output and high efficiency**										
							1LE1 (Aluminum)			
Special technology [6]										
Mounting of LL 861 900 220 rotary pulse encoder [8]	**G04**						✓	✓	✓	✓
Mounting of HOG 9 D 1024 I rotary pulse encoder [8]	**G05**						✓	✓	✓	✓
Mounting of HOG 10 D 1024 I rotary pulse encoder [8]	**G06**						✓	✓	✓	✓
Mechanical design and degrees of protection										
Protective cover for types of construction [8]	**H00**						✓	✓	✓	✓
Screwed-on feet (instead of cast)	**H01**						✓	✓	✓	✓
Radial seal on DE for flange-mounting motors with oil resistance to 0.1 bar [9]	**H23**						✓	✓	✓	✓
Low-noise version for 2-pole motors with clockwise direction of rotation	**F77**						–	–	✓	✓
Low-noise version for 2-pole motors with counter-clockwise direction of rotation	**F78**						–	–	✓	✓
IP65 degree of protection [10]	**H20**						✓	✓	✓	✓
IP56 degree of protection (non-heavy-sea) [11]	**H22**						✓	✓	✓	✓
Vibration-proof version	**H02**						✓	✓	✓	✓
Condensation drainage holes [12]	**H03**						✓	✓	✓	✓
Non-rusting screws (externally)	**H07**						✓	✓	✓	✓
Prepared for mountings, only center hole [13]	**G40**						✓	✓	✓	✓
Prepared for mountings with D12 shaft [13]	**G41**						✓	✓	✓	✓
Prepared for mountings with D16 shaft [13]	**G42**						✓	✓	✓	✓
Protective cover for encoder (loosely enclosed – only for mountings acc. to order codes G40, G41 and G42)	**G43**						✓	✓	✓	✓
Coolant temperature and site altitude										
Coolant temperature –40 °C to +40 °C [14]	**D03**						✓	✓	✓	✓
Coolant temperature –30 °C to +40 °C [14]	**D04**						✓	✓	✓	✓
Designs in accordance with standards and specifications										
Electrical according to NEMA MG1-12 [15]	**D30**						✓	✓	✓	✓
Design according to UL with "Recognition Mark" [16]	**D31**						✓	✓	✓	✓
Canadian regulations (CSA) [17]	**D40**						✓	✓	✓	✓
PSE Mark Japan [18]	**D46**						✓	✓	✓	–

For legend and footnotes, see Page 1/59.

Special versions

Special versions	Additional identification code **-Z** with order code and plain text if required	Motor type frame size 56	63	71	80	90	100	112	132	160
Self-ventilated energy-saving motors with improved efficiency **Self-ventilated energy-saving motors with high efficiency** **Self-ventilated motors with increased output and improved efficiency** **Self-ventilated motors with increased output and high efficiency**										
							1LE1 (Aluminum)			
Bearings and lubrication										
Measuring nipple for SPM shock pulse measurement for bearing inspection [19)]	**Q01**						✓	✓	✓	✓
Bearing design for increased cantilever forces	**L22**						✓	✓	✓	✓
Special bearing for DE and NDE, bearing size 63	**L25**						✓	✓	✓	✓
Regreasing device [19)]	**L23**						✓	✓	✓	✓
Located bearing at DE	**L20**						✓	✓	✓	✓
Located bearing at NDE	**L21**						✓	✓	✓	◻
Balance and vibration quantity										
Vibration quantity A							◻	◻	◻	◻
Vibration quantity B	**L00**						✓	✓	✓	✓
Half-key balancing (standard)							◻	◻	◻	◻
Full-key balancing	**L02**						✓	✓	✓	✓
Balancing without key	**L01**						✓	✓	✓	✓
Shaft and rotor										
Concentricity of shaft extension, coaxiality and linear movement in accordance with DIN 42955 Tolerance R for flange-mounting motors	**L08**						✓	✓	✓	✓
Second standard shaft extension	**L05**						✓	✓	✓	✓
Shaft extension with standard dimensions, without featherkey way	**L04**						✓	✓	✓	✓
Concentricity of shaft extension in accordance with DIN 42955 Tolerance R	**L07**						✓	✓	✓	✓
Standard shaft made of non-rusting steel	**L06**						✓	✓	✓	✓
Non-standard cylindrical shaft extension [20)]	**Y55** • and identification code						✓	✓	✓	✓
Heating and ventilation										
Fan cover for textile industry	**F75**						✓	✓	✓	✓
Metal external fan [21)]	**F76**						✓	✓	✓	✓
Anti-condensation heaters for 230 V	**Q02**						✓	✓	✓	✓
Anti-condensation heaters for 115 V	**Q03**						✓	✓	✓	✓
Sheet metal fan cover	**F74**						✓	✓	✓	✓
Rating plate and extra rating plates										
Second rating plate, loose	**M10**						✓	✓	✓	✓
Nirosta rating plate	**M11**						✓	✓	✓	✓
Extra rating plate or rating plate with deviating rating plate data	**Y80** • and identification code						✓	✓	✓	✓
Extra rating plate with identification codes	**Y82** • and identification code						✓	✓	✓	✓
Additional information on rating plate and on package label (max. of 20 characters)	**Y84** • and identification code						✓	✓	✓	✓

For legend and footnotes, see Page 1/59.

Special versions	Additional identification code **-Z** with order code and plain text if required	Motor type frame size 56	63	71	80	90	100	112	132	160
Self-ventilated energy-saving motors with improved efficiency **Self-ventilated energy-saving motors with high efficiency** **Self-ventilated motors with increased output and improved efficiency** **Self-ventilated motors with increased output and high efficiency**										
							1LE1 (Aluminum)			
Packaging, safety notes, documentation and test certificates										
Without safety and commissioning note. Customer's declaration of renouncement required.	**B00**						○	○	○	○
With one safety and start-up guide per box pallet	**B01**						○	○	○	○
Acceptance test certificate 3.1 in accordance with EN 10204	**B02**						✓	✓	✓	✓
Printed operating instructions English/German enclosed	**B04**						✓	✓	✓	✓
Type test with heat run for horizontal motors, with acceptance	**B83**						✓	✓	✓	✓
Wire-lattice pallet	**B99**						○	○	○	○
Connected in star for dispatch	**M01**						✓	✓	✓	✓
Connected in delta for dispatch	**M02**						✓	✓	✓	✓

◘ Standard version
○ Without additional charge
• This order code only determines the price of the version – Additional plain text is required.
O. R. Available on request
✓ With additional charge

1) Not possible in combination with order code **R15** "One cable gland, metal".

2) In combination with motor protection (position 15 of the Order No.) or with option anti-condensation heater request required.

3) Not possible in combination with voltage code **22** or **34**.

4) Not possible in combination with the following order codes: **N01, N02, N03, N05, N06, N07, N08, N11.**
Use according to temperature class 155 (F) possible only.

5) Cannot be used for motors in UL version (order code **D31**). The grease lifetime specified in catalog part 0 "Introduction" refers to CT 40 °C. When the coolant temperature rises by 10 K, the grease lifetime or relubrication interval is halved.

6) A second shaft extension is not possible. Please inquire for mounted brakes.

7) When quoting or ordering, it is necessary to provide the brake supply voltage for order codes **F10, F11** and **F12**.

8) All encoders are supplied with a protective cover as standard. The protective cover is not supplied with the combination rotary pulse encoder with separately driven fan, as, in this case, the roatry pulse encoder is installed under the fan cover.

9) Not possible for type of construction IM V3.

10) Not possible in combination with rotary pulse encoder HOG 9 D 1024I (order code **G05**) and/or brake 2LM8 (order code **F01**).

11) Not possible in combination with brake 2LM8 – order code **F01**.

12) Supplied with the condensation drainage holes sealed at the drive end (DE) and non-drive end (NDE) (IP55, IP56, IP65). If condensation drainage holes are required for motors with IM B6, IM B7 or IM B8 type of construction (feet located on side or top), it is necessary to order the motors in their respective type of construction and order code **H03**, so that the condensation drainage holes can be mounted in the correct positional arrangement.

13) Motors that are prepared for additional mountings (order codes **G40, G41, G42**) are supplied without protective cover as standard. If a protective cover is requested as cover or as mechanical protection for mounting provided by the customer, it can be ordered with order code **G43**.
Not possible in combination with order code **L00**, vibration quantity level B.

14) In connection with mountings, the respective technical data must be observed; request required.

15) 1LE1 motors in EFF1 version without additional charge (standard version).

16) Possible up to 600 V max. The rated voltage is indicated on the rating plate without voltage range.

17) The rated voltage is indicated on the rating plate without voltage range.

18) "Small power motors" with a rated output of up to 3 kW which are exported to Japan must bear the PSE marking.

19) Not possible when brake is mounted.

20) When motors are ordered that have a longer or shorter shaft extension than normal, the required position and length of the featherkey way must be specified in a sketch. It must be ensured that only featherkeys in accordance with DIN 6885, Form A are permitted to be used. The featherkey way is positioned centrally on the shaft extension. The length is defined by the manufacturer normatively. Not valid for: Conical shafts, non-standard threaded journals, non-standard shaft tolerances, friction welded journals, extremely "thin" shafts, special geometry dimensions (e.g. square journals), hollow shafts. Valid for non-standard shaft extensions DE or NDE. The featherkeys are supplied in every case. For order codes **Y55** and **L05**:
- Dimensions D and DA ≤ internal diameter of roller bearing (see dimesnion tables under "Dimensions")
- Dimensions E and EA ≤ 2 x length E (normal) of the shaft extension

For an explanation of the order codes, see catalog part 0 "Introduction".

21) For 1LE1 motors with metal external fan, converter-fed operation is permitted. The metal external fan is not possible in combination with the low-noise version – order code **F77** or **F78**.

Special versions

Options or order codes (supplement **-Z** is required)

Not possible for General Line motors with shorter delivery time.

Special versions	Additional identification code **-Z** with order code and plain text if required	Motor type frame size 56	63	71	80	90	100	112	132	160
Forced-air cooled motors without external fan and fan cover with improved efficiency **Forced-air cooled motors without external fan and fan cover with high efficiency** **Self-cooled motors without external fan and fan cover with improved efficiency** **Self-cooled motors without external fan and fan cover with high efficiency**										
							1LE1/1PC1 (Aluminum)			
Motor connection and connection box										
One cable gland, metal	**R15**						✓	✓	✓	✓
Rotation of the connection box through 90°, entry from DE	**R10**						○	○	○	○
Rotation of the connection box through 90°, entry from NDE	**R11**						○	○	○	○
Rotation of the connection box through 180°	**R12**						○	○	○	○
Larger connection box	**R50**						✓	✓	✓	✓
Reduction piece for M cable gland in accordance with British standard, both cable entries mounted [1)]	**R30**						✓	✓	✓	✓
External earthing	**H04**						✓	✓	✓	✓
3 cables protruding, 0.5 m long [2)3)]	**R20**						✓	✓	✓	✓
3 cables protruding, 1.5 m long [2)3)]	**R21**						✓	✓	✓	✓
6 cables protruding, 0.5 m long [2)]	**R22**						✓	✓	✓	✓
6 cables protruding, 1.5 m long [2)]	**R23**						✓	✓	✓	✓
6 cables protruding, 3 m long [2)]	**R24**						✓	✓	✓	✓
Connection box on NDE [4)]	**H08**						✓	✓	✓	✓
Windings and insulation										
Temperature class 155 (F), used acc. to 155 (F), with service factor (SF)	**N01**						✓	✓	✓	✓
Temperature class 155 (F), used acc. to 155 (F), with increased output	**N02**						✓	✓	✓	✓
Temperature class 155 (F), used acc. to 155 (F), with increased coolant temperature	**N03**						✓	✓	✓	✓
Temperature class 180 (H) at rated power and max. CT 60 °C [5)]	**N11**						✓	✓	✓	✓
Increased air humidity/ temperature with 30 to 60 g water per m^3 of air	**N20**						✓	✓	✓	✓
Temperature class 155 (F), used acc. to 130 (B), coolant temperature 45 °C, derating approx. 4 %	**N05**						✓	✓	✓	✓

For legend and footnotes, see Page 1/63.

Special versions	Additional identification code **-Z** with order code and plain text if required	Motor type frame size 56	63	71	80	90	100	112	132	160
Forced-air cooled motors without external fan and fan cover with improved efficiency **Forced-air cooled motors without external fan and fan cover with high efficiency** **Self-cooled motors without external fan and fan cover with improved efficiency** **Self-cooled motors without external fan and fan cover with high efficiency**										
							1LE1/1PC1 (Aluminum)			
Windings and insulation (continued)										
Temperature class 155 (F), used acc. to 130 (B), coolant temperature 50 °C, derating approx. 8 %	**N06**						✓	✓	✓	✓
Temperature class 155 (F), used acc. to 130 (B), coolant temperature 55 °C, derating approx. 13 %	**N07**						✓	✓	✓	✓
Temperature class 155 (F), used acc. to 130 (B), coolant temperature 60 °C, derating approx. 18 %	**N08**						✓	✓	✓	✓
Increased air humidity/ temperature with 60 to 100 g water per m^3 of air	**N21**						✓	✓	✓	✓
Temperature class 155 (F), used acc. to 155 (F), other requirements	**Y52** • and identification code						✓	✓	✓	✓
Colors and paint finish										
Special finish in RAL 7030 stone gray							◻	◻	◻	◻
Special finish in other standard RAL colors : RAL 1002, 1013, 1015, 1019, 2003, 2004, 3000, 3007, 5007, 5009, 5010, 5012, 5015, 5017, 5018, 5019, 6011, 6019, 6021, 7000, 7001, 7004, 7011, 7016, 7022, 7031, 7032, 7033, 7035, 9001, 9002, 9005, Page 0/101	**Y54** • and special finish RAL….						✓	✓	✓	✓
Special finish in special-RAL colors: for RAL colors, see "Special finish in special RAL colors", Page 0/101	**Y51** • and special finish RAL….						✓	✓	✓	✓
Special finish sea air resistant	**S03**						O. R.	O. R.	O. R.	O. R.
Unpainted (only cast iron parts primed)	**S00**						○	○	○	○
Unpainted, only primed	**S01**						✓	✓	✓	✓
Mechanical design and degree of protection										
Screwed-on feet (instead of cast)	**H01**						✓	✓	✓	✓
Radial seal on DE for flange-mounting motors with oil resistance to 0.1 bar [6)]	**H23**						✓	✓	✓	✓
IP65 degree of protection	**H20**						✓	✓	✓	✓
IP56 degree of protection (non-heavy-sea)	**H22**						✓	✓	✓	✓
Vibration-proof version	**H02**						✓	✓	✓	✓
Condensation drainage holes [7)]	**H03**						✓	✓	✓	✓
Non-rusting screws (externally)	**H07**						✓	✓	✓	✓
Coolant temperature and site altitude										
Coolant temperature –40 °C to +40 °C	**D03**						✓	✓	✓	✓
Coolant temperature –30 °C to +40 °C	**D04**						✓	✓	✓	✓

For legend and footnotes, see Page 1/63.

Special versions

Special versions	Additional identification code **-Z** with order code and plain text if required	Motor type frame size 56	63	71	80	90	100	112	132	160
Forced-air cooled motors without external fan and fan cover with improved efficiency **Forced-air cooled motors without external fan and fan cover with high efficiency** **Self-cooled motors without external fan and fan cover with improved efficiency** **Self-cooled motors without external fan and fan cover with high efficiency**										
							1LE1/1PC1 (Aluminum)			
Designs in accordance with standards and specifications										
Electrical according to NEMA MG1-12 [8]	**D30**						✓	✓	✓	✓
Design according to UL with "Recognition Mark" [9]	**D31**						✓	✓	✓	✓
Canadian regulations (CSA) [10]	**D40**						✓	✓	✓	✓
PSE Mark Japan [11]	**D46**						✓	✓	✓	–
Bearings and lubrication										
Measuring nipple for SPM shock pulse measurement for bearing inspection	**Q01**						✓	✓	✓	✓
Bearing design for increased canteliver forces	**L22**						✓	✓	✓	✓
Special bearing for DE and NDE, bearing size 63	**L25**						✓	✓	✓	✓
Regreasing device	**L23**						✓	✓	✓	✓
Located bearing at DE	**L20**						✓	✓	✓	✓
Located bearing at NDE	**L21**						✓	✓	✓	◻
Balance and vibration quantity										
Vibration quantity A							◻	◻	◻	◻
Vibration quantity B	**L00**						✓	✓	✓	✓
Half-key balancing (standard)							◻	◻	◻	◻
Full-key balancing	**L02**						✓	✓	✓	✓
Balancing without key	**L01**						✓	✓	✓	✓
Shaft and rotor										
Concentricity of shaft extension, coaxiality and linear movement in accordance with DIN 42955 Tolerance R for flange-mounting motors	**L08**						✓	✓	✓	✓
Shaft extension with standard dimensions, without featherkey way	**L04**						✓	✓	✓	✓
Concentricity of shaft extension in accordance with DIN 42955 Tolerance R	**L07**						✓	✓	✓	✓
Standard shaft made of non-rusting steel	**L06**						✓	✓	✓	✓
Non-standard cylindrical shaft extension [12]	**Y55** • and identification code						✓	✓	✓	✓
Heating and ventillation										
Anti-condensation heaters for 230 V	**Q02**						✓	✓	✓	✓
Anti-condensation heaters for 115 V	**Q03**						✓	✓	✓	✓

For legend and footnotes, see Page 1/63.

Special versions	Additional identification code **-Z** with order code and plain text if required	Motor type frame size 56	63	71	80	90	100	112	132	160
Forced-air cooled motors without external fan and fan cover with improved efficiency **Forced-air cooled motors without external fan and fan cover with high efficiency** **Self-cooled motors without external fan and fan cover with improved efficiency** **Self-cooled motors without external fan and fan cover with high efficiency**										
							1LE1/1PC1 (Aluminum)			
Rating plate and extra rating plates										
Second rating plate, loose	**M10**						✓	✓	✓	✓
Nirosta rating plate	**M11**						✓	✓	✓	✓
Extra rating plate or rating plate with deviating rating plate data	**Y80** • and identification code						✓	✓	✓	✓
Extra rating plate with identification codes	**Y82** • and identification code						✓	✓	✓	✓
Additional information on rating plate and on package label (max. of 20 characters)	**Y84** • and identification code						✓	✓	✓	✓
Packaging, safety notes, documentation and test certificates										
Without safety and commissioning note. Customer's declaration of renouncement required.	**B00**						○	○	○	○
With one safety and start-up guide per box pallet	**B01**						○	○	○	○
Acceptance test certificate 3.1 in accordance with EN 10204	**B02**						✓	✓	✓	✓
Printed operating instructions English/German enclosed	**B04**						✓	✓	✓	✓
Type test with heat run for horizontal motors, with acceptance	**B83**						✓	✓	✓	✓
Wire-lattice pallet	**B99**						○	○	○	○
Connected in star for dispatch	**M01**						✓	✓	✓	✓
Connected in delta for dispatch	**M02**						✓	✓	✓	✓

◘ Standard version
○ Without additional charge
• This order code only determines the price of the version – Additional plain text is required.
O. R. Available on request
✓ With additional charge

1) Not possible in combination with order code **R15** "One cable gland, metal".

2) In combination with motor protection (position 15 of the Order No.) or with option anti-condensation heater request required.

3) Not possible in combination with voltage code **22** or **34**.

4) Not possible in combination with the following order codes: **N01, N02, N03, N05, N06, N07, N08, N11.**
Use according to temperature class 155 (F) possible only.

5) Cannot be used for motors in UL version (order code **D31**). The grease lifetime specified in catalog part 0 "Introduction" refers to CT 40 °C. When the coolant temperature rises by 10 K, the grease lifetime or relubrication interval is halved.

6) Not possible for type of construction IM V3.

7) Supplied with the condensation drainage holes sealed at the drive end (DE) and non-drive end (NDE) (IP55, IP56, IP65). If condensation drainage holes are required for motors with IM B6, IM B7 or IM B8 type of construction (feet located on side or top), it is necessary to order the motors in their respective type of construction and order code **H03**, so that the condensation drainage holes can be mounted in the correct positional arrangement.

8) 1LE1 motors in EFF1 version without additional charge (standard version).

9) Possible up to 600 V max. The rated voltage is indicated on the rating plate without voltage range.

10) The rated voltage is indicated on the rating plate without voltage range.

11) "Small power motors" with a rated output of up to 3 kW which are exported to Japan must bear the PSE marking.

12) When motors are ordered that have a longer or shorter shaft extension than normal, the required position and length of the featherkey way must be specified in a sketch. It must be ensured that only featherkeys in accordance with DIN 6885, Form A are permitted to be used. The featherkey way is positioned centrally on the shaft extension. The length is defined by the manufacturer normatively. Not valid for: Conical shafts, non-standard threaded journals, non-standard shaft tolerances, friction welded journals, extremely "thin" shafts, special geometry dimensions (e.g. square journals), hollow shafts. Valid for non-standard shaft extensions DE or NDE. The featherkeys are supplied in every case. For order code **Y55**:
- Dimensions D and DA ≤ internal diameter of roller bearing (see dimesnion tables under "Dimensions")
- Dimensions E and EA ≤ 2 x length E (normal) of the shaft extension

For an explanation of the order codes, see catalog part 0 "Introduction".

Overview

Couplings

The motor from Siemens is connected to the machine or gear unit through a coupling. Flender is an important coupling manufacturer with a wide range of products. For standard applications, Siemens recommends that elastic couplings of Flender types N-Eupex and Rupex or torsionally rigid couplings of types Arpex and Zapex are used. For special applications, Fludex and Elpex couplings are recommended.

Source of supply:
Siemens contact partner – ordering from Catalog Siemens MD 10.1 “FLENDER Standard Couplings”

or

A. Friedr. Flender AG
Kupplungswerk Mussum
Industriepark Bocholt
Schlavenhorst 100
46395 Bocholt, Germany
Tel. +49 (0) 2871-92 2185
Fax +49 (0) 2871-92 2579

http://www.flender.com
e-mail: couplings@flender.com

Mounting of encoder

In the case of mounting by the customer.

Baumer Hübner GmbH
Planufer 92b
10967 Berlin, Germany
Tel. +49 (0) 30-690 03-0
Fax +49 (0) 30-690 03-104

http://www.baumerhuebner.com
e-mail: info@baumerhuebner.com

Leine & Linde (Deutschland) GmbH
Bahnhofstraße 36
73430 Aalen, Germany
Tel. +49 (0) 7361-78 093-0
Fax +49 (0) 7361-78 093-11

http://www.leinelinde.com
e-mail: info@leinelinde.se

More information

Spare motors and repair parts

- Supply commitment for spare motors and repair parts following delivery of the motor
  - For up to 5 years, in the event of total motor failure, Siemens will supply a comparable motor with regard to the mounting dimensions and functions (the type series may vary).
  - Repair parts will be supplied for up to 5 years.
  - For up to 10 years, Siemens will provide information and will, if necessary, supply documentation for repair parts.
- When repair parts are ordered, the following details must be provided:
  - Designation and part number
  - Order No. and factory number of the motor
- For bearing types, see the „Orientation”, “Technical data”, Page 0/124.
- For standard components, a supply commitment does not apply.
- Support – Hotline
  In Germany
  Tel.: 01 80 – 5 05 04 48

You will find telephone numbers for other countries on our Internet site:
http://www.siemens.com/automation/service&support

Overview

Overall dimensions

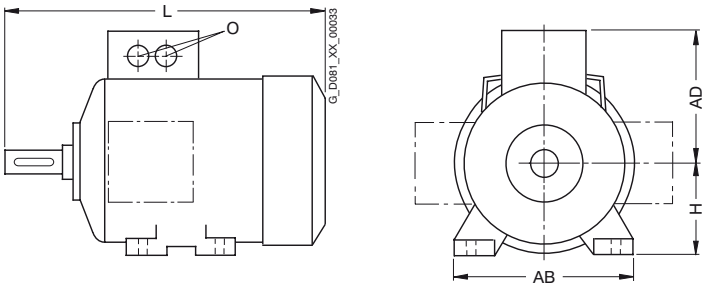

Frame size	Type	Number of poles	Dimensions L	AD	H	AB	O
100 L	General Line motors with shorter delivery time		395.5 [1]	166	100	196	2 x M32 x1.5
	Self-ventilated energy-saving motors with improved/high efficiency		395.5 [1]	166	100	196	2 x M32 x1.5
	Self-ventilated motors with increased output and improved/high efficiency		430.5 [1]	166	100	196	2 x M32 x1.5
	Forced-air-cooled motors without external fan and fan cover with improved/high efficiency		321.5	166	100	196	2 x M32 x1.5
	Self-cooled motors without external fan and fan cover with improved/high efficiency		321.5	166	100	196	2 x M32 x1.5
112 M	General Line motors with shorter delivery time		389 [1]	177	112	226	2 x M32 x1.5
	Self-ventilated energy-saving motors with improved/high efficiency		389 [1]	177	112	226	2 x M32 x1.5
	Self-ventilated motors with increased output and improved/high efficiency		414 [1]	177	112	226	2 x M32 x1.5
	Forced-air-cooled motors without external fan and fan cover with improved/high efficiency		311	177	112	226	2 x M32 x1.5
	Self-cooled motors without external fan and fan cover with improved/high efficiency		311	177	112	226	2 x M32 x1.5

Frame size	Type	Number of poles	Dimensions L	AD	H	AB	O
132 S/ 132 M	General Line motors with shorter delivery time		465 [1]	202	132	256	2 x M32 x 1.5
	Self-ventilated energy-saving motors with improved/high efficiency		465 [1]	202	132	256	2 x M32 x 1.5
	Self-ventilated motors with increased output and improved/high efficiency		515 [1]	202	132	256	2 x M32 x 1.5
	Forced-air-cooled motors without external fan and fan cover with improved/high efficiency		380.5	202	132	256	2 x M32 x 1.5
	Self-cooled motors without external fan and fan cover with improved/high efficiency		380.5	202	132	256	2 x M32 x 1.5
160 M/ 160 L	General Line motors with shorter delivery time		604 [1]	236.5	160	300	2 x M40 x 1.5
	Self-ventilated energy-saving motors with improved/high efficiency		604 [1]	236.5	160	300	2 x M40 x 1.5
	Self-ventilated motors with increased output and improved/high efficiency		664 [1]	236.5	160	300	2 x M40 x 1.5
	Forced-air-cooled motors without external fan and fan cover with improved/high efficiency		510	236.5	160	300	2 x M40 x 1.5
	Self-cooled motors without external fan and fan cover with improved/high efficiency		510	236.5	160	300	2 x M40 x 1.5

[1] The length is specified as far as the tip of the fan cover.

Overview (continued)

Notes on the dimensions

- Dimension drawings according to DIN EN 50347 and IEC 60072.
- Fits

The shaft extensions specified in the dimension tables (DIN 748) and centering spigot diameters (DIN EN 50347) are machined with the following fits:

Dimension designation	ISO fit DIN ISO 286-2	
D, DA	up to 30 over 30 to 50 over 50	j6 k6 m6
N	up to 250 over 250	j6 h6
F, FA		h9
K		H17
S	Flange (FF)	H17

The drilled holes of couplings and belt pulleys should have an ISO fit of at least H7.

- Dimension tolerances

For the following dimensions, the admissible deviations are given below:

Dimension designation	Dimensions	Admissible deviation
H	up to 250 over 250	–0.5 –1.0
E, EA		–0.5

Keyways and feather keyways (dimensions GA, GC, F and FA) are made in compliance with DIN 6885 Part 1.

- All dimensions are specified in mm.

More information

SD configurator

SD configurator (on DVD of the interactive catalog CA01 "Products for Automation and Drives")

The interactive Catalog CA 01 contains over 100 000 products with approximately 5 million potential drive system product variants.

The **SD configurator** has been developed to facilitate selection of the correct motor and/or converter from the wide spectrum of A&D SD products. It is integrated as a "selection aid" in this catalog.

The **SD configurator** makes it easier to find the right drive solution. It supplies the correct order number as well as the corresponding documentation.

It can display operating instructions, factory test certificate, terminal box documentation, etc. and generates data sheets, dimension drawings and a start-up calculation for the relevant products.

It is also easy to assign a suitable converter to the selected motor.

The extensive help function not only explains the program functions, it also contains extensive technical background material.

SD configurator product range:
Low-voltage motors (energy-saving motors) with corresponding documentation and dimension drawings, low-voltage converters of the MICROMASTER 4 product series, SINAMICS G110 and SINAMICS G120 inverter chassis units as well as SINAMICS G120D distributed frequency inverters, and SIMATIC ET 200S FC and SIMATIC ET 200pro FC frequency converters for distributed I/O.

The interactive CA 01 catalog can be ordered from your local Siemens sales representative or on the Internet at http://www.siemens.com/automation/CA01

Links to tips, tricks and downloads for functional or content updates can be found at this address.

Order No. for CA 01, English International:
DVD: **E86060-D4001-A510-C7-7600**

Note: The SD configurator offline tool within CA 01 can be updated for the new 1LE1 motor series online over the Internet.

Dimension sheet generator

(part of the SD configurator)

A dimension drawing can be created in the SD configurator for every configurable motor. A dimension drawing can be requested for every other motor.

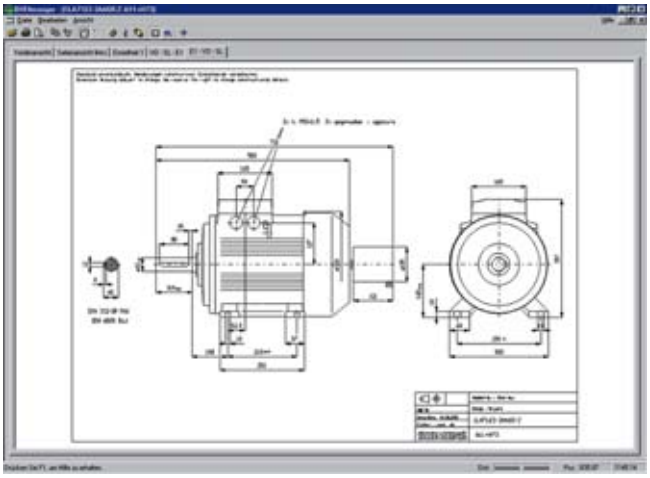

When a complete Order No. is entered with or without order codes, a dimension drawing can be called up under the "Documentation" tab.

These dimension drawings can be presented in different views and sections and printed.

The corresponding dimension sheets can be exported, saved and processed further in DXF format (interchange/import format for CAD systems) or as bitmap graphics.

The SD configurator has been integrated into the CA 01 electronic catalog as a selection aid (for further information, see above).

The interactive CA 01 catalog can be ordered from your local Siemens sales representative or on the Internet at http://www.siemens.com/automation/CA01.

At this address, you will also find links to Tips & Tricks and to downloads for function or content updates.

Order No. for CA 01, English International
DVD: **E86060-D4001-A510-C7-7600**

Note:
The SD configurator offline tool within CA01 can be updated for the new 1LE1 motor series online over the Internet.

Dimensional drawings

Aluminum series 1LE1, frame sizes 100 to 160 – General Line motors with shorter delivery time

Type of construction IM B3

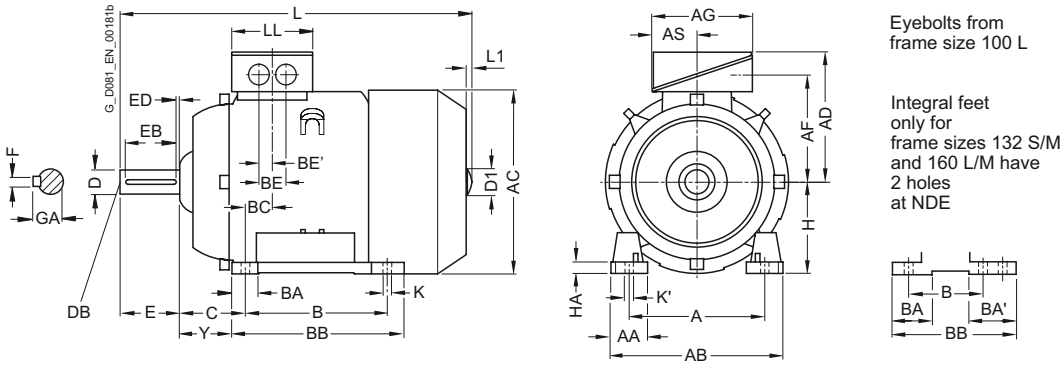

Types of construction IM B5 and IM V1
For flange dimensions, see Page 1/76 (Z = the number of retaining holes)

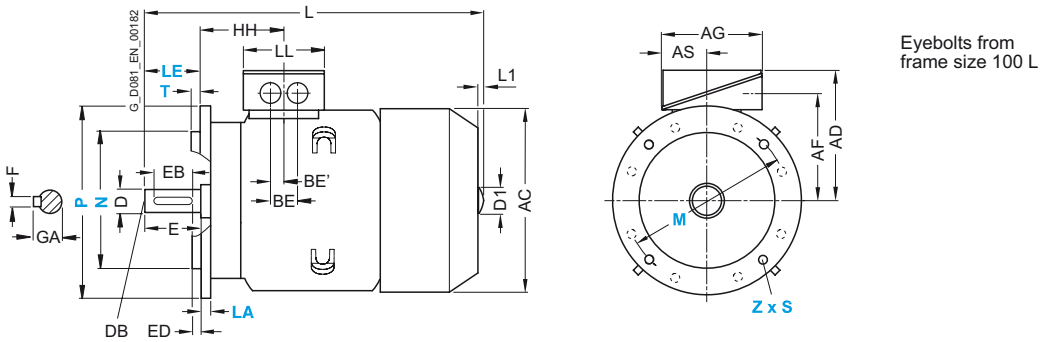

For motor		Dimension designation acc. to **IEC**																		
Frame size	Number of poles	A	AA	AB	AC	AD	AF	AG	AS	B*	BA	BA'	BB	BC	BE	BE'	C	H	HA	Y[1]
100 L	2, 4, 6, 8	160	42	196	198	166	125.5	135	63.5	140	37.5	–	176	33.5	50	25	63	100	12	45
112 M	2, 4, 6, 8	190	46	226	222	177	136.5	135	63.5	140	35.4	–	176	26	50	25	70	112	12	52
132 S	2, 4, 6, 8	216	53	256	262	202	159.5	155	70.5	140	38	76	218	26.5	48	24	89	132	15	69
132 M	2, 4, 6, 8	216	53	256	262	202	159.5	155	70.5	178	38	76	218	26.5	48	24	89	132	15	69
160 M	2, 4, 6, 8	254	60	300	314	236.5	190	175	77.5	210	44	89	300	47	57	28.5	108	160	18	85
160 L	2, 4, 6, 8	254	60	300	314	236.5	190	175	77.5	254	44	89	300	47	57	28.5	108	160	18	85

* This dimension is assigned in DIN EN 50347 to the frame size listed.
1) Additional information: not a standard dimension acc. to DIN 50347.

Dimensional drawings (continued)

Aluminum series 1LE1, frame sizes 100 to 160 – General Line motors with shorter delivery time

Type of construction IM B35
For flange dimensions, see Page 1/76 (Z = the number of retaining holes)

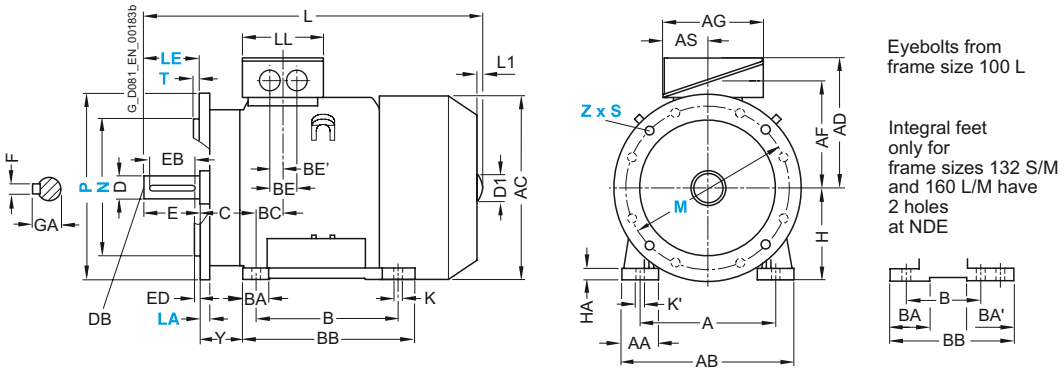

Type of construction IM B14
For flange dimensions, see Page 1/76 (Z = the number of retaining holes)

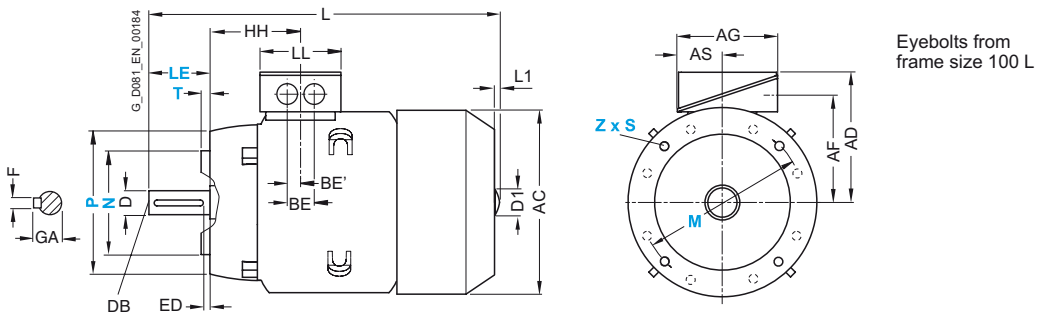

For motor		Dimension designation acc. to **IEC**							DE shaft extension						
Frame size	Number of poles	HH	K	K'	L [1]	L1	D1	LL	D	DB	E	EB	ED	F	GA
100 L	2, 4, 6, 8	96.5	12	16	395.5	7	32	112	28	M10	60	50	5	8	31
112 M	2, 4, 6, 8	96	12	16	389	7	32	112	28	M10	60	50	5	8	31
132 S	2, 4, 6, 8	115.5	12	16	465	8.5	39	130	38	M12	80	70	5	10	41
132 M	2, 4, 6, 8	115.5	12	16	465	8.5	39	130	38	M12	80	70	5	10	41
160 M	2, 4, 6, 8	155	15	19	604	10	45	145	42	M16	110	90	10	12	45
160 L	2, 4, 6, 8	155	15	19	604	10	45	145	42	M16	110	90	10	12	45

[1] The length is specified as far as the tip of the fan cover.

Dimensional drawings (continued)

Aluminum series 1LE1, frame sizes 100 to 160 – self-ventilated motors with improved/high efficiency

Type of construction IM B3

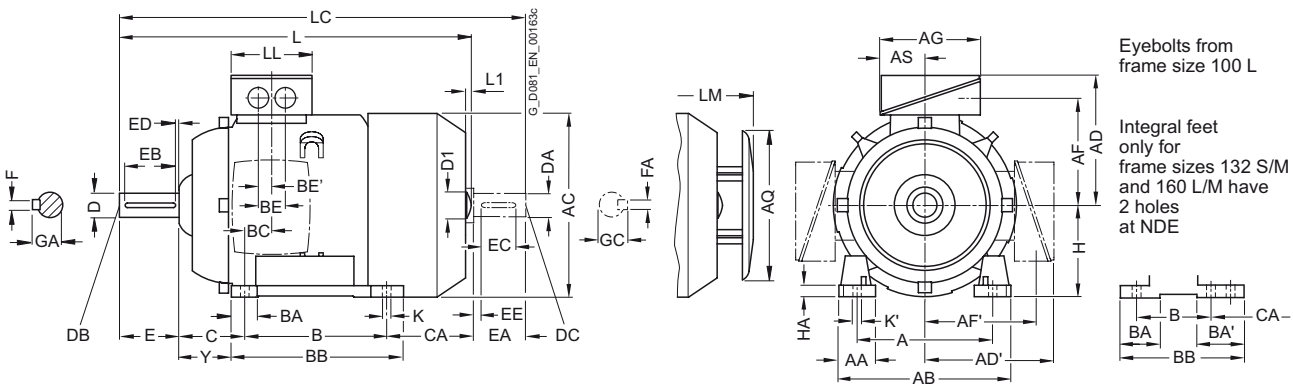

Types of construction IM B5 and IM V1
For flange dimensions, see Page 1/76 (Z = the number of retaining holes)

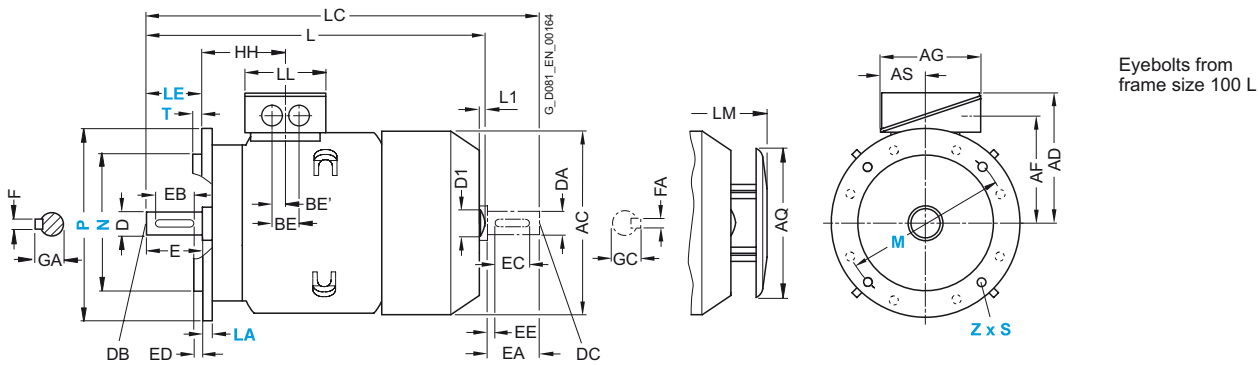

For motor		Dimension designation acc. to **IEC**																						
Frame size	Number of poles	A	AA	AB	AC	AD	AD'	AF	AF'	AG	AQ	AS	B*	BA	BA'	BB	BC	BE	BE'	C	CA*	H	HA	Y[1]
100 L	2, 4, 6, 8	160	42	196	198	166	166	125.5	125.5	135	195	63.5	140	37.5	–	176	33.5	50	25	63	141	100	12	45
112 M	2, 4, 6, 8	190	46	226	222	177	177	136.5	136.5	135	195	63.5	140	35.4	–	176	26	50	25	70	129.7	112	12	52
132 S	2, 4, 6, 8	216	53	256	262	202	202	159.5	159.5	155	260	70.5	140	38	76 [2]	218 [3]	26.5	48	24	89	128.5 [4]	132	15	69
132 M	2, 4, 6, 8	216	53	256	262	202	202	159.5	159.5	155	260	70.5	178	38	76	218	26.5	48	24	89	128.5 [4]	132	15	69
160 M	2, 4, 6, 8	254	60	300	314	236.5	236.5	190	190	175	260	77.5	210	44	89 [5]	300 [6]	47	57	28.5	108	148 [7]	160	18	85
160 L	2, 4, 6, 8	254	60	300	314	236.5	236.5	190	190	175	260	77.5	254	44	89	300	47	57	28.5	108	148 [7]	160	18	85

* This dimension is assigned in DIN EN 50347 to the frame size listed.
1) Additional information: not a standard dimension acc. to DIN 50347.
2) With screwed-on feet, dimension BA' is 38 mm.
3) With screwed-on feet, dimension BB is 180 mm.
4) With screwed-on feet, dimension CA is 166.5 mm.
5) With screwed-on feet, dimension BA' is 44 mm.
6) With screwed-on feet, dimension BB is 256 mm.
7) With screwed-on feet, dimension CA is 192 mm.

Dimensional drawings (continued)

Aluminum series 1LE1, frame sizes 100 to 160 – self-ventilated motors with improved/high efficiency

Type of construction IM B35
For flange dimensions, see Page 1/76 (Z = the number of retaining holes)

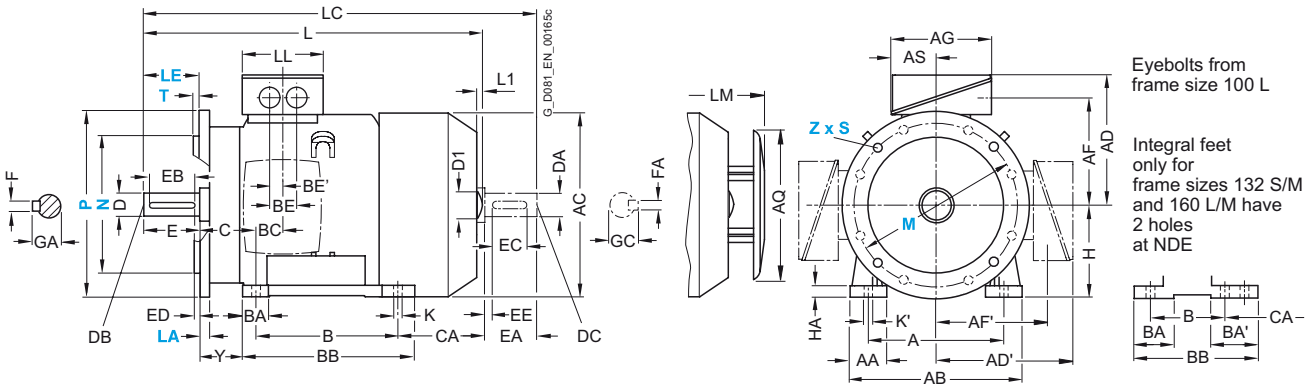

Type of construction IM B14
For flange dimensions, see Page 1/76 (Z = the number of retaining holes)

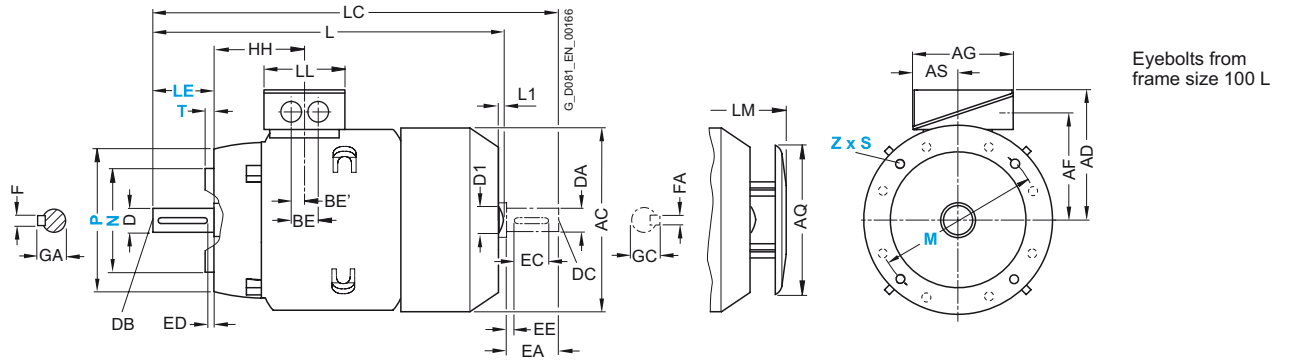

For motor		Dimension designation acc. to **IEC**									DE shaft extension							NDE shaft extension						
Frame size	Number of poles	HH	K	K'	L [1]	L1	D1	LC	LL	LM	D	DB	E	EB	ED	F	GA	DA	DC	EA	EC	EE	FA	GC
100 L	2, 4, 6, 8	96.5	12	16	395.5	7	32	454	112	428.5	28	M10	60	50	5	8	31	24	M8	50	40	5	8	27
112 M	2, 4, 6, 8	96	12	16	389	7	32	450	112	422	28	M10	60	50	5	8	31	24	M8	50	40	5	8	27
132 S	2, 4, 6, 8	115.5	12	16	465	8.5	39	535.5	130	500.5	38	M12	80	70	5	10	41	28	M10	60	50	5	8	31
132 M	2, 4, 6, 8	115.5	12	16	465	8.5	39	535.5	130	500.5	38	M12	80	70	5	10	41	28	M10	60	50	5	8	31
160 M	2, 4, 6, 8	155	15	19	604	10	45	730	145	638	42	M16	110	90	10	12	45	42	M16	110	90	10	12	45
160 L	2, 4, 6, 8	155	15	19	604	10	45	730	145	638	42	M16	110	90	10	12	45	42	M16	110	90	10	12	45

[1] The length is specified as far as the tip of the fan cover.

Dimensional drawings (continued)

Aluminum series 1LE1, frame sizes 100 to 160 – self-ventilated motors with increased output and improved/high efficiency

Type of construction IM B3

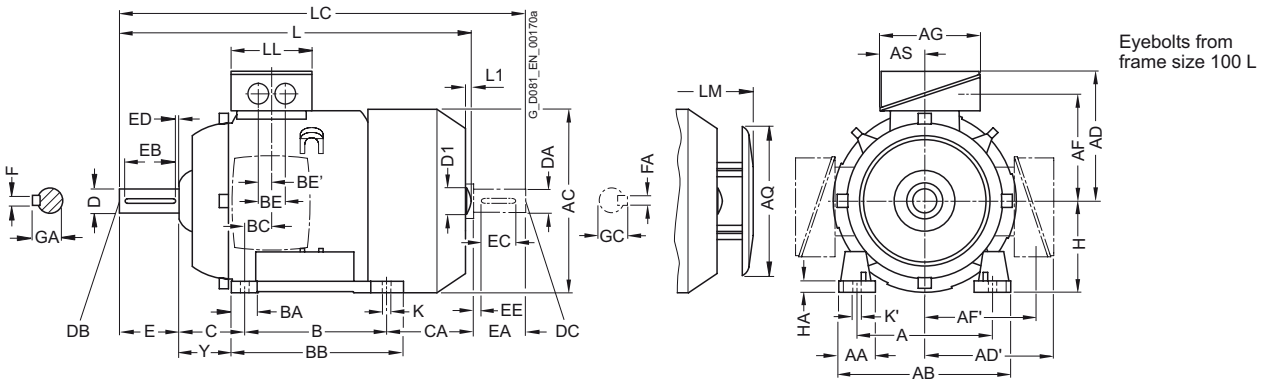

Type of construction IM B5 and IM V1
For flange dimensions, see Page 1/76 (Z = the number of retaining holes)

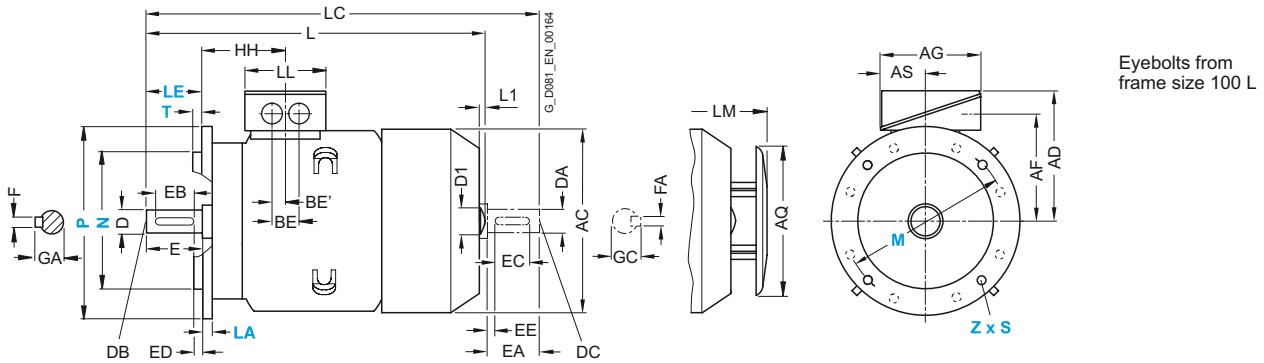

For motor		Dimension designation acc. to **IEC**																						
Frame size	Number of poles	A	AA	AB	AC	AD	AD'	AF	AF'	AG	AQ	AS	B*	BA	BA'	BB	BC	BE	BE'	C	CA*	H	HA	Y [1]
100 L	2, 4, 6, 8	160	42	196	198	166	166	125.5	125.5	135	195	63.5	140	37.5	–	176	33.5	50	25	63	176	100	12	45
112 M	2, 4, 6, 8	190	46	226	222	177	177	136.5	136.5	135	195	63.5	140	35.4	–	176	26	50	25	70	155	112	12	52
132 M	2, 4, 6, 8	216	53	256	262	202	202	159.5	159.5	155	260	70.5	178	38	–	218	26.5	48	24	89	178.5	132	15	69
160 L	2, 4, 6, 8	254	60	300	314	236.5	236.5	190	190	175	260	77.5	254	44	–	300	47	57	28.5	108	208	160	18	85

* This dimension is assigned in DIN EN 50347 to the frame size listed.
[1] Additional information: not a standard dimension acc. to DIN 50347.

Dimensional drawings (continued)

Aluminum series 1LE1, frame sizes 100 to 160 – self-ventilated motors with increased output and improved/high efficiency

Type of construction IM B35
For flange dimensions, see Page 1/76 (Z = the number of retaining holes)

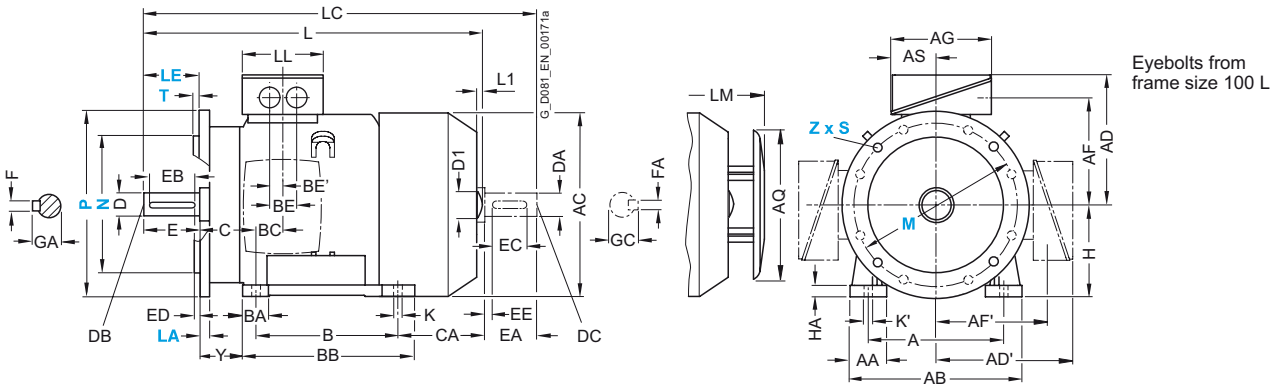

Type of construction IM B14
For flange dimensions, see Page 1/76 (Z = the number of retaining holes)

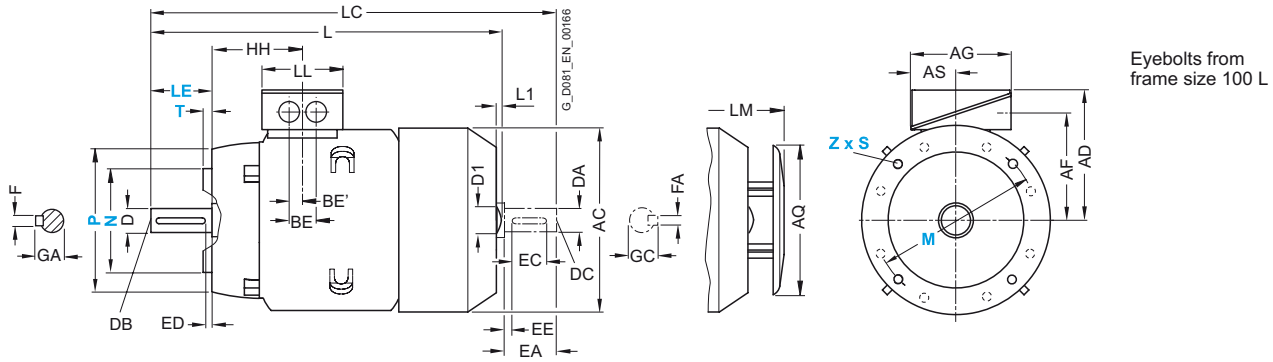

For motor		Dimension designation acc. to **IEC**									DE shaft extension							NDE shaft extension						
Frame size	Number of poles	HH	K	K'	L [1]	L1	D1	LC	LL	LM	D	DB	E	EB	ED	F	GA	DA	DC	EA	EC	EE	FA	GC
100 L	2, 4, 6, 8	96.5	12	16	430.5	7	32	489	112	463.5	28	M10	60	50	5	8	31	24	M8	50	40	5	8	27
112 M	2, 4, 6, 8	96	12	16	414	7	32	475	112	447	28	M10	60	50	5	8	31	24	M8	50	40	5	8	27
132 M	2, 4, 6, 8	115.5	12	16	515	8.5	39	585.5	130	550.5	38	M12	80	70	5	10	41	28	M10	60	50	5	8	31
160 L	2, 4, 6, 8	155	15	19	664	10	45	790	145	698	42	M16	110	90	10	12	45	42	M16	110	90	10	12	45

[1] The length is specified as far as the tip of the fan cover.

Dimensional drawings (continued)

Aluminum series 1LE1, frame sizes 100 to 160 – forced-air cooled motors with improved/high efficiency
Aluminum series 1PC1, frame sizes 100 to 160 – self-cooled motors with improved/high efficiency

Type of construction IM B3

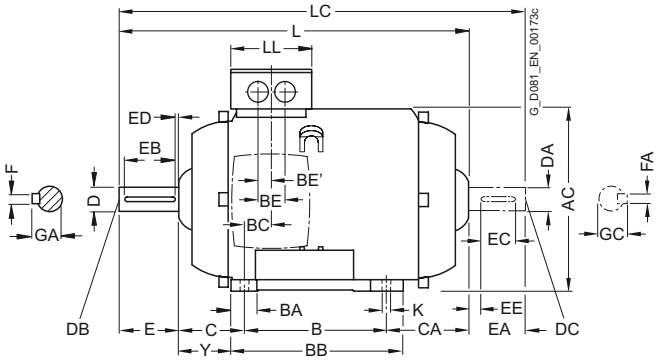

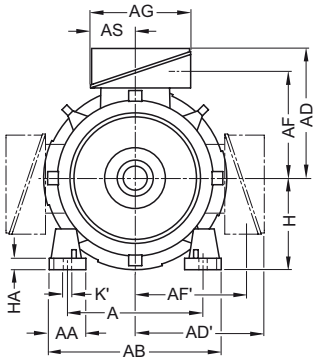

Eyebolts from frame size 100 L

Integral feet only for frame sizes 132 S/M and 160 L/M have 2 holes at NDE

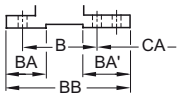

Type of construction IM B5 and IM V1

For flange dimensions, see Page 1/76 (Z = the number of retaining holes)

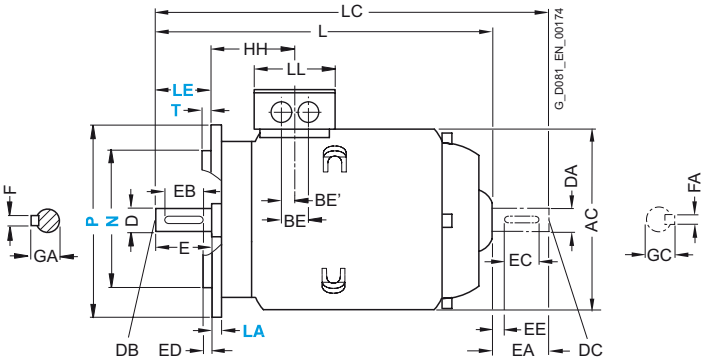

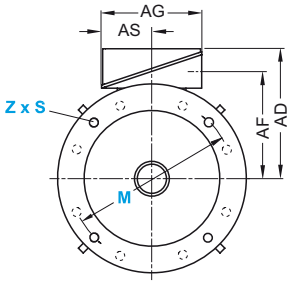

Eyebolts from frame size 100 L

For motor		Dimension designation acc. to **IEC**																					
Frame size	Number of poles	A	AA	AB	AC	AD	AD'	AF	AF'	AG	AS	B*	BA	BA'	BB	BC	BE	BE'	C	CA*	H	HA	Y [1]
100 L	2, 4, 6, 8	160	42	196	197	166	166	125.5	125.5	135	63.5	140	37.5	–	176	33.5	50	25	63	–	100	12	45
112 M	2, 4, 6, 8	190	46	226	221	177	177	136.5	136.5	135	63.5	140	35.4	–	176	26	50	25	70	–	112	12	52
132 S	2, 4, 6, 8	216	53	256	261	202	202	159.5	159.5	155	70.5	140	38	76 [2]	218 [3]	26.5	48	24	89	–	132	15	69
132 M	2, 4, 6, 8	216	53	256	261	202	202	159.5	159.5	155	70.5	178	38	76	218	26.5	48	24	89	–	132	15	69
160 M	2, 4, 6, 8	254	60	300	314	236.5	236.5	190	190	175	77.5	210	44	89 [4]	300 [5]	47	57	28.5	108	–	160	18	85
160 L	2, 4, 6, 8	254	60	300	314	236.5	236.5	190	190	175	77.5	254	44	89	300	47	57	28.5	108	–	160	18	85

* This dimension is assigned in DIN EN 50347 to the frame size listed.
1) Additional information: not a standard dimension acc. to DIN 50347.
2) With screwed-on feet, dimension BA' is 38 mm.
3) With screwed-on feet, dimension BB is 180 mm.
4) With screwed-on feet, dimension BA' is 44 mm.
5) With screwed-on feet, dimension BB is 256 mm.

Dimensional drawings (continued)

Aluminum series 1LE1, frame sizes 100 to 160 – forced-air cooled motors with improved/high efficiency
Aluminum series 1PC1, frame sizes 100 to 160 – self-cooled motors with improved/high efficiency

Type of construction IM B35
For flange dimensions, see Page 1/76 (Z = the number of retaining holes)

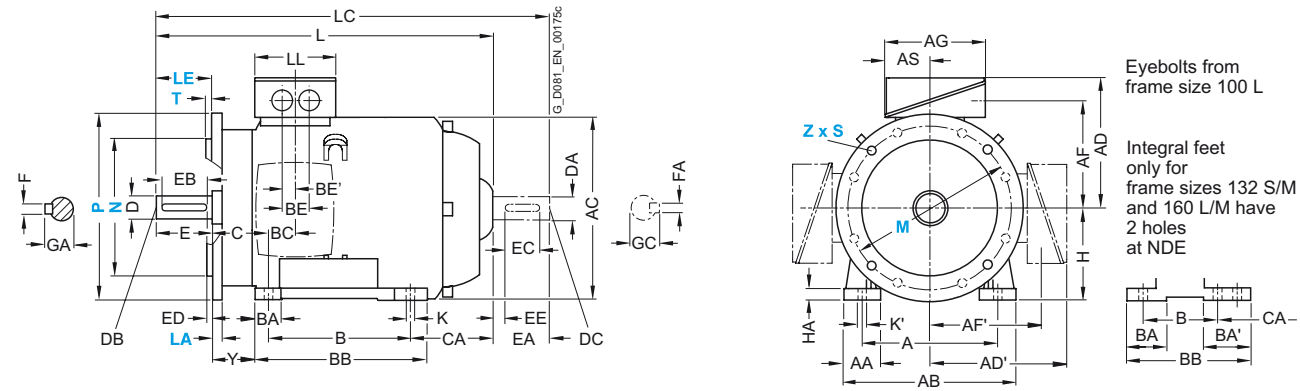

Type of construction IM B14
For flange dimensions, see Page 1/76 (Z = the number of retaining holes)

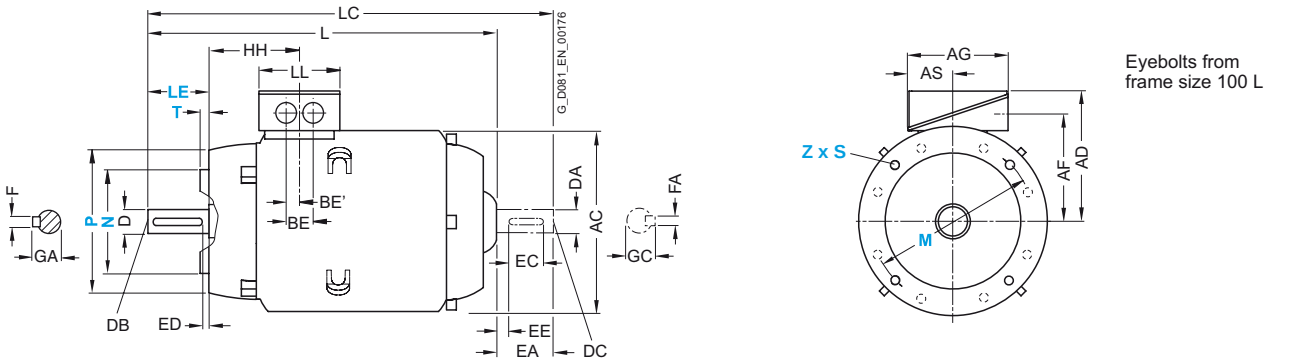

For motor		Dimension designation acc. to **IEC**						DE shaft extension							NDE shaft extension						
Frame size	Number of poles	HH	K	K'	L	LC	LL	D	DB	E	EB	ED	F	GA	DA	DC	EA	EC	EE	FA	GC
100 L	2, 4, 6, 8	96.5	12	16	321.5	–	112	28	M10	60	50	5	8	31	–	–	–	–	–	–	–
112 M	2, 4, 6, 8	96	12	16	311	–	112	28	M10	60	50	5	8	31	–	–	–	–	–	–	–
132 S	2, 4, 6, 8	115.5	12	16	380.5	–	130	38	M12	80	70	5	10	41	–	–	–	–	–	–	–
132 M	2, 4, 6, 8	115.5	12	16	380.5	–	130	38	M12	80	70	5	10	41	–	–	–	–	–	–	–
160 M	2, 4, 6, 8	155	15	19	510	–	145	42	M16	110	90	10	12	45	–	–	–	–	–	–	–
160 L	2, 4, 6, 8	155	15	19	510	–	145	42	M16	110	90	10	12	45	–	–	–	–	–	–	–

Dimensional drawings (continued)

Flange dimensions

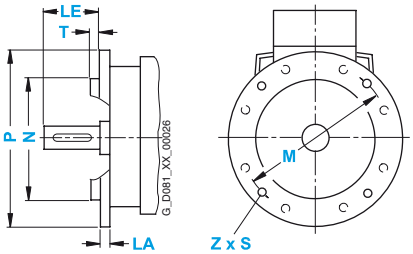

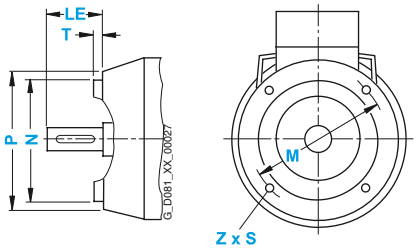

In DIN EN 50347, flanges FF with through holes and flanges FT with tapped holes are assigned to frame sizes. The designation of flange A and C according to DIN 42948 (invalid since 09/2003) are also listed for information purposes. See the table below. (Z = the number of retaining holes)

Frame size	Type of construction	Flange type	Flange with Through holes (**FF**/A) Tapped holes (**FT**/C)		Dimension designation acc. to **IEC**							
			According to DIN EN 50347	Acc. to DIN 42948	**LA**	**LE**	**M**	**N**	**P**	**S**	**T**	**Z**
100 L	IM B5, IM B35, IM V1, IM V3	Flange	**FF 215**	A 250	11	60	215	180	250	14.5	4	4
	IM B14, IM B34, IM V18, IM V19	Standard flange	**FT 130**	C 160	–	60	130	110	160	M8	3.5	4
	IM B14, IM B34, IM V18, IM V19	Special flange (next larger standard flange)	**FT 165**	C 200	–	60	165	130	200	M10	3.5	4
112 M	IM B5, IM B35, IM V1, IM V3	Flange	**FF 215**	A 250	11	60	215	180	250	14.5	4	4
	IM B14, IM B34, IM V18, IM V19	Standard flange	**FT 130**	C 160	–	60	130	110	160	M8	3.5	4
	IM B14, IM B34, IM V18, IM V19	Special flange (next larger standard flange)	**FT 165**	C 200	–	60	165	130	200	M10	3.5	4
132 S, 132 M	IM B5, IM B35, IM V1, IM V3	Flange	**FF 265**	A 300	12	80	265	230	300	14.5	4	4
	IM B14, IM B34, IM V18, IM V19	Standard flange	**FT 165**	C 200	–	80	165	130	200	M10	3.5	4
	IM B14, IM B34, IM V18, IM V19	Special flange (next larger standard flange)	**FT 215**	C 250	–	80	215	180	250	M12	4	4
160 M, 160 L	IM B5, IM B35, IM V1, IM V3	Flansch	**FF 300**	A 350	13	110	300	250	350	18.5	5	4
	IM B14, IM B34, IM V18, IM V19	Normflansch	**FT 215**	C 250	–	110	215	180	250	M12	4	4